MM	IN
.508	.020
1.778	.070
5.58	.220
7.87	.310
11.18	.440
28.96	1.140
31.75	1.250
35.05	1.380
57.15	2.250
87.88	3.460

M497

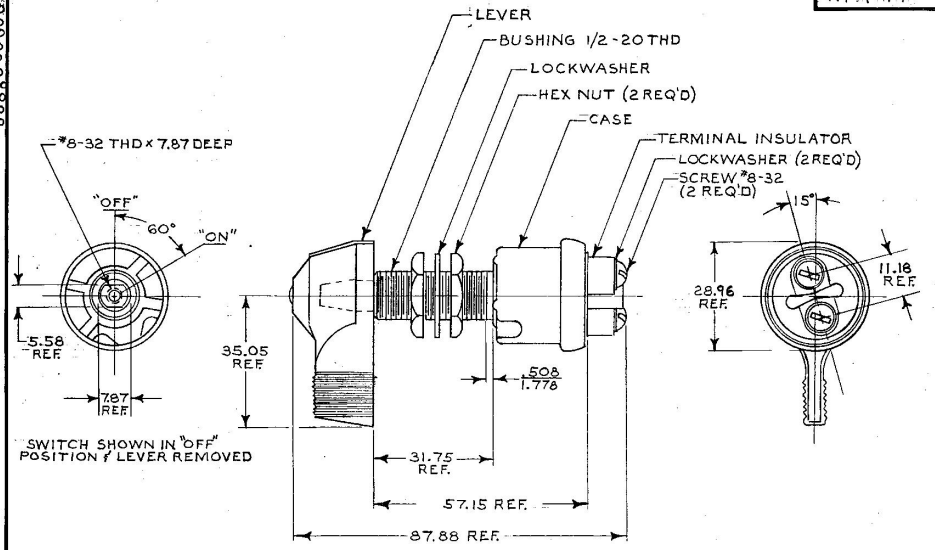

SWITCH SHOWN IN "OFF" POSITION & LEVER REMOVED

METRIC

Confidential Property of Cole Hersee

DO NOT SCALE

LET.	WAS	DATE	BY	LET	WAS	DATE	BY
				E	REDRAWN	12-3-84	VAK

MATERIAL	DRAWN	CHECKED	APPRV'D.	SCALE		DATE DRAWN
[illegible]	M	[illegible]		1:1		1-25-60
FINISH	Cole Hersee Co.					DATE BLUEPRINT
TOLERANCES DECIMAL ± METRIC ±	ROTARY SWITCH					M497

BRUNING 40-21 63765

CH-188(4-78)