MM	IN
7.87	.310
15.87	.625
17.78	.700
27.43	1.080
46.22	1.820
36.06	1.420
0.25	.010

5027

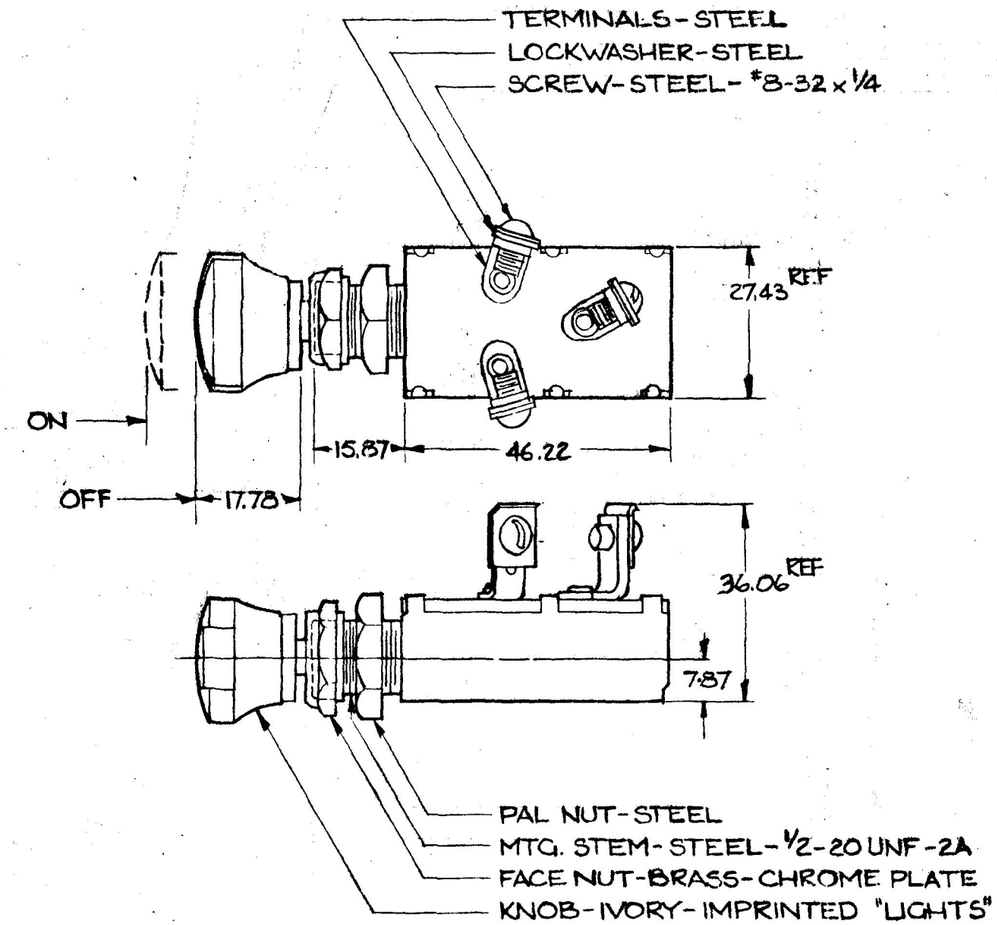

NOTES:

1) SILVERED CONTACT SURFACES

2) NUMBER OF POLES 1
2 CIRCUIT
NUMBER OF THROWS 1

3) SEALING: NONE

(K) 4) ALL STEEL PARTS PLATED

5) RATING

	RESISTIVE	INDUCTIVE
12V	18 AMP	15 AMP
24V	10 AMP	8 AMP

LIFE @ RATED CURRENT
MAKE & BREAK
12V—100,000 MIN
24V—50,000 MIN

COLE-HERSEE CO

METRIC

DO NOT SCALE

LET	WAS	DATE	BY	LET	WAS	DATE	BY
				K	25234	10/22/92	TGN
				J	[illegible]	[illegible]	[illegible]

MATERIAL —||—
FINISH —||—
TOLERANCES FRACTIONAL DECIMAL ±.25

DRAWN	CHECKED	APPRV'D.	SCALE
PJE	TY		FULL

COLE-HERSEE COMPANY
BOSTON, MASS. 02127, U.S.A.

PUSH-PULL SWITCH

DATE DRAWN 5-8-52
DATE BLUEPRINT
5027

SPAULDING CO., 21-5313

Confidential Property of Cole Hersee