Revision Control Record			
Rev.	Description of Change	ECN No.	Date
A	ADD NEW PARTS	05125	03/09/05

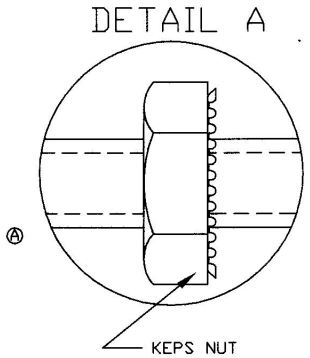

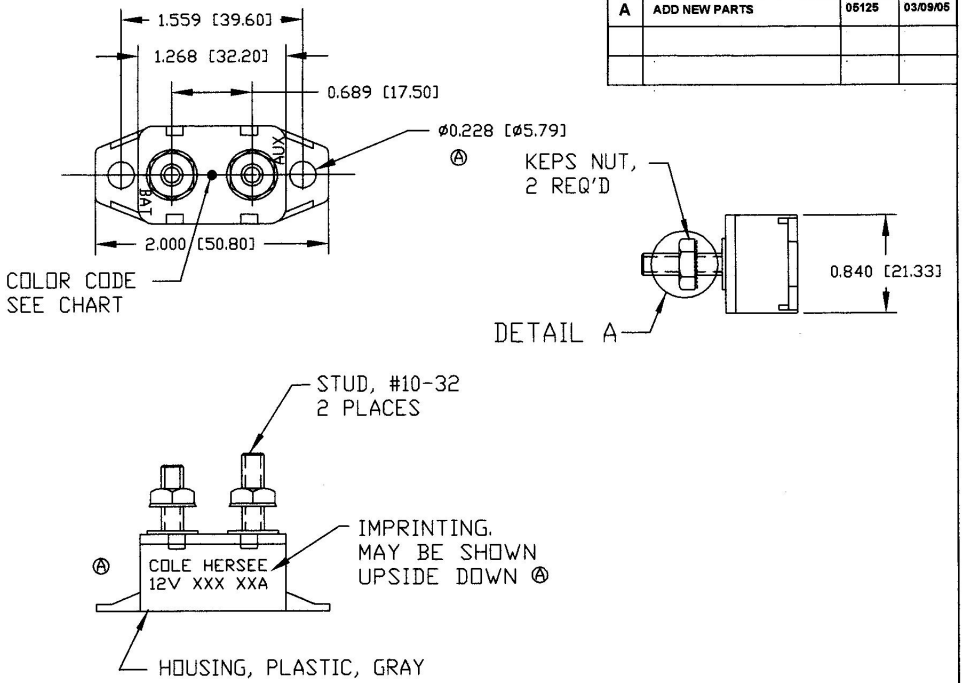

PL

PLASTIC HOUSING
LESS HARDWARE

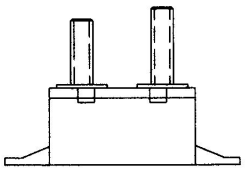

PT NO	AMPS	VOLTS	TYP	Ⓐ HWRE	COLOR CODE
30427-50 Ⓐ	50	12	1	YES	-//-
30427-40	40	12	1	YES	BLUE Ⓐ
P-30427-40 Ⓐ	40	12	1	YES	-//-
30427-30 Ⓐ	30	12	1	YES	GREEN
P-30427-30 Ⓐ	30	12	1	YES	-//-
30427-20 Ⓐ	20	12	1	YES	-//-
30427-15	15	12	1	YES	WHITE
P-30427-15	15	12	1	YES	-//-
30427-6 Ⓐ	6	12	1	YES	RED
P-30427-6 Ⓐ	6	12	1	YES	-//-

TYPE OF
CIRCUIT BREAKERS

TYPE 1
CYCLING CIRCUIT BREAKER

TYPE 2
NON-CYCLING CIRCUIT BREAKER

TYPE 3
RESETABLE CIRCUIT BREAKER

NOTES:
1. ALL STEEL PARTS PLATED
2. ALL DIMENSIONS ARE REFERENCE ONLY
Ⓐ 3. AMPERAGE & VOLTAGE RATING INDICATED ON CASE.
4. CIRCUIT BREAKER MEETS SAE J553 JUN 88
Ⓐ 5. ALL CIRCUIT BREAKERS HAVE PLASTIC HOUSING

Tolerances Unless otherwise specifically noted, the following are default tolerances;
* 2-place Decimal Dimensions +/-.02"
* 3-place Decimal Dimensions +/-.005"
* Angular Dimensions +/- 1.0 Deg.
* Metric: Refer to equivalent English Dimension Tolerance
>>> NOTE: *All tolerances are Non-Cumulative.* <<<

Dimensional Units All dimensions are expressed in inches except those shown in brackets (xxx) are expressed in millimeters

"REF." or an Asterisk (*) = Non-Toleranced Reference Dimension, shown for clarification purposes only.

PROPRIETARY INFORMATION This Engineering Drawing, and the information contained herein, is proprietary to Cole Hersee Company and may not be disclosed, re-produced, or in any other way transferred or communicated to any other party without the express written consent of an authorized representative of Cole Hersee Company.

DESIGN CONTROL It is the responsibility of the individual using / referencing this drawing to assure that the noted design revision level agrees with the revision level of the Controlled Document (Master Drawing). This is a NON-CONTROLLED DOCUMENT unless otherwise specifically noted.

DO NOT SCALE - Dimensional variation may occur during printing / reproduction.

Special Characteristics:
- Critical Characteristic, relating to Safety and/or Regulatory Compliance
- [X] Significant Characteristic relating to Process Control (SPC)
- (KC) Control Dimension relating to Form - Fit - Function as defined by Cole Hersee Company and/or the Customer

(Note that the identification of any Characteristics as being "Special" does not alter the requirement that ALL specified dimensions & tolerances must be met.)

Cole Hersee Co.
20 Old Colony Ave., South Boston, MA, 02127
Phn: 617-268-2100 Web: www.colehersee.com

Description: **CIRCUIT BREAKER**

Used On or Ref.:	Scale: 1:1	Drawn By: JMP	Date Drawn: 03/03/05	Responsible Engineer: GA	Pg. 1 of 1	Drawing / Part No.: 30427 CHART	A