| MM | IN |
|---|---|
| .508 | .020 |
| 1.778 | .070 |
| 5.58 | .220 |
| 7.87 | .310 |
| 11.18 | .440 |
| 28.96 | 1.140 |
| 31.75 | 1.250 |
| 35.05 | 1.380 |
| 57.15 | 2.250 |
| 87.88 | 3.460 |

M497

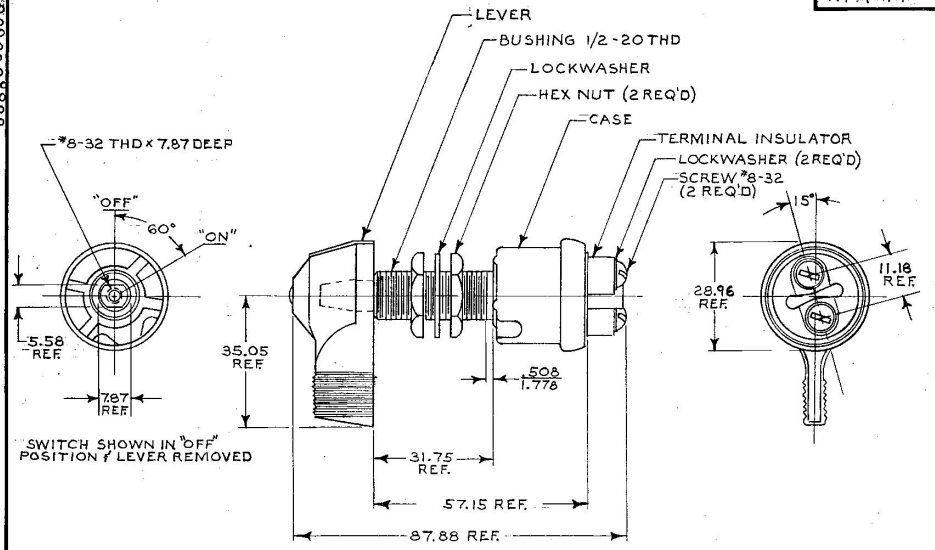


SWITCH SHOWN IN "OFF" POSITION & LEVER REMOVED

METRIC

Confidential Property of Cole Hersee

DO NOT SCALE

| LET. | WAS | DATE | BY | LET | WAS | DATE | BY |
|---|---|---|---|---|---|---|---|
| | | | | | | | |
| | | | | | | | |
| | | | | | | | |
| | | | | | | | |
| | | | | E | REDRAWN | 12-3-84 | VAK |

| MATERIAL | DRAWN | CHECKED | APPRV'D. | SCALE | | DATE DRAWN |
|---|---|---|---|---|---|---|
| [illegible] | M | [illegible] | | 1:1 | | 1-25-60 |
| FINISH | Cole Hersee Co. | | | | | DATE BLUEPRINT |
| TOLERANCES DECIMAL ± METRIC ± | ROTARY SWITCH | | | | | M497 |

BRUNING 40-21 63765

CH-188(4-78)