MM	IN
.25	.010
.76	.030
1.01	.040
1.52	.060
1.65	.065
2.03	.080
2.28	.090
3.04	.120
3.55	.140
4.82	.190
9.14	.360
9.39	.370
15.74	.620
16.00	.630
46.48	1.830
46.99	1.850
1.57	.062
13.66	.538

NPM 3-4-76
EX-16393C

APPLICABLE SAE STANDARD OR RECOMMENDED PRACTICE SAE J259

956-3122

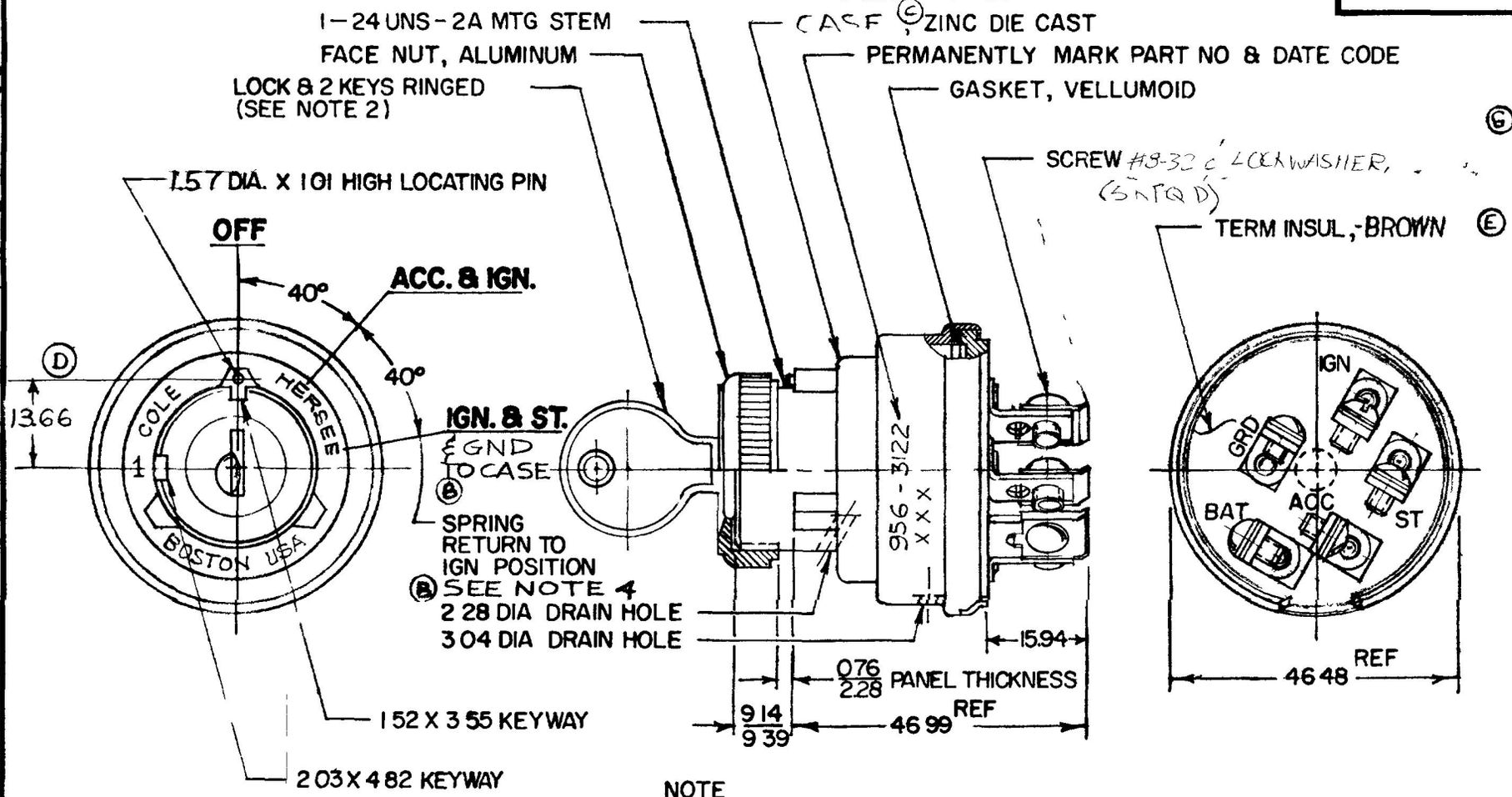

NOTE
1. TERM INSUL GASKET SEALED
2. SHUTTER TYPE SEAL ON LOCK FACE
3. O-RING SEAL AT MTG STEM
4. START LOCK-OUT FEATURE, SWITCH MUST GO TO "OFF" POSITION BEFORE START CIRCUIT CAN BE RE-ENERGIZED
(F) 5. ALL STEEL PARTS PLATED

METRIC

DO NOT SCALE

LET	WAS	DATE	BY	LET	WAS	DATE	BY
				E	ECN 25189	8/13/92	TJH
				D	1.14 / 16.00 / 22457	6-5-84	VAK
				C	HOUSING	8-13-82	DB
G	[illegible]	[illegible]	[illegible]	B	NOTT ADDED / 21267	12-22-80	DRS
F	CAD OR ZINC / 25234	12/22/92	[illegible]	A	REDRAWN	3-22-79	[illegible]

MATERIAL	DRAWN	CHECKED	APPRV'D	SCALE		DATE DRAWN
— // —	EA	FY 4-2-79		1 1		1-6-76
FINISH — // —	Cole Hersee Co. 20 OLD COLONY AVENUE SOUTH BOSTON MASS 27					DATE BLUEPRINT
TOLERANCES DECIMAL ± METRIC ± .25	3-POSITION IGNITION & START SWITCH					956-3122

CH 188(4 78)

Confidential Property of Cole Hersee