LTR	DATE	REVISION	CHK	APD
L	11/03/97	38727C-REVISED & REDRAWN IN NEW STRUCTURE LH		
M	11/05/07	85439D-REDRAWN IN UG 12.15 WAS 11.7 GMB		

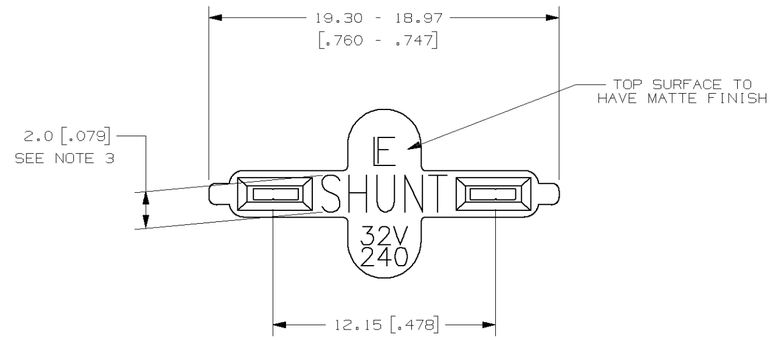

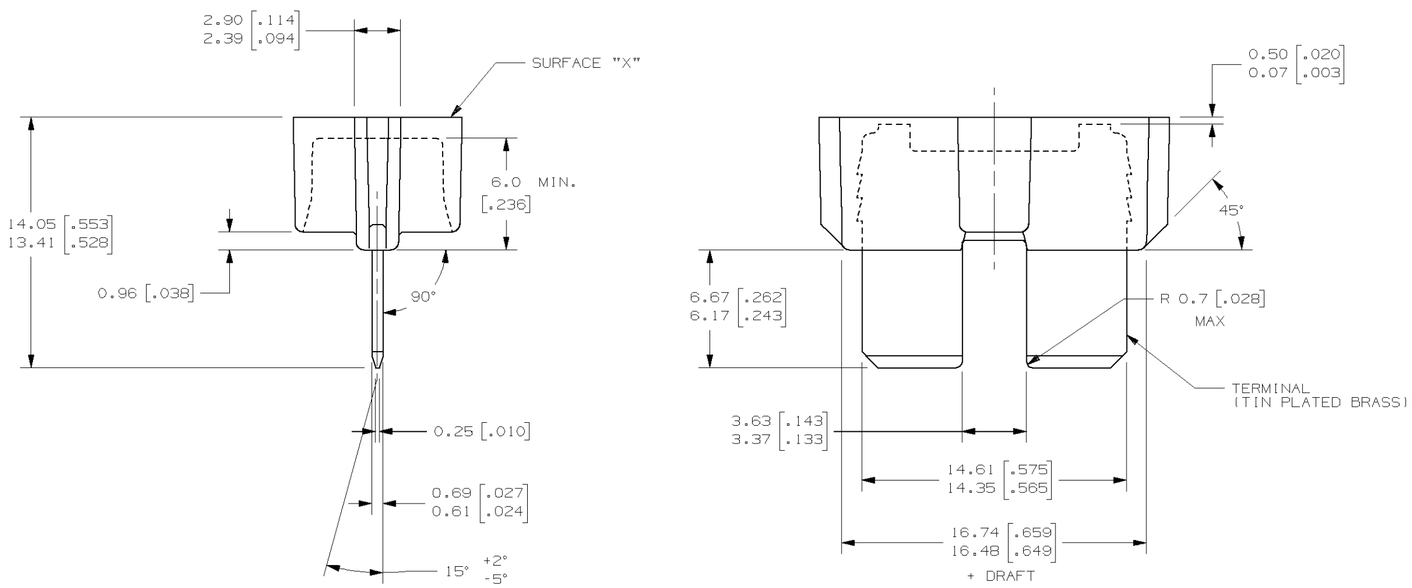

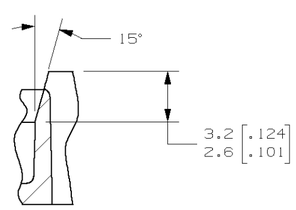

SECTION A-A
TERMINAL OMITTED
SCALE 4:1

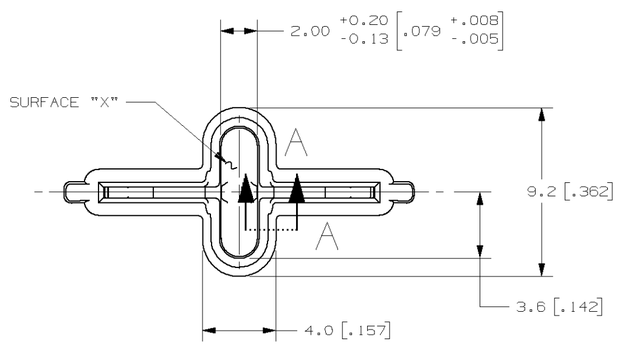

NOTES:

1. SHUNT BODY IS TO BE MADE OF A BLACK OPAQUE THERMOPLASTIC MATERIAL, UL94 V-0 RATED.
2. ALL CHARACTERS ARE TO BE INDENTED IN TOP SURFACE.
3. CHARACTERS "SHUNT" SHALL BE MOLDED INTO PART AND ORIENTATION MAY BE ROTATED 180° FROM INDICATED POSITION SHOWN.
4. DIMENSIONS ARE SYMMETRICAL ABOUT CENTER LINES. THE REGISTRATION BETWEEN THE 16.740/16.48 AND 14.35/14.61 DIMENSIONS MUST BE HELD WITHIN ±.13.

METRIC

NO	COMPONENT NO	DESCRIPTION	QTY/M	U/M
-				
-				
-				

BILL OF MATERIAL

UNLESS OTHERWISE SPECIFIED, DIMENSIONS ARE IN MILLIMETERS. DIMENSIONS IN BRACKETS [ ] ARE INCHES

UNLESS OTHERWISE SPECIFIED, DIMENSIONS DO NOT INCLUDE PLATING.

◎	DENOTES CRITICAL CHARACTERISTICS.
CPK	DENOTES CPK DIMENSIONS, -MINIMUM CPK VALUE
⟨ST⟩	DENOTES A CHARACTERISTIC THAT PROVIDES AN INDICATION OF PROCESS PERFORMANCE. PROCEDURE FOR MEASUREMENT AND TRACKING TO BE DEFINED IN LITTELFUSE INSPECTION INSTRUCTIONS
CP	DENOTES CP DIMENSIONS, -MINIMUM CP VALUE MUST BE WITHIN THE DIMENSIONAL LIMITATIONS SHOWN ON DRAWING AND INITIALLY LOCATED TO ALLOW FOR MAXIMUM TOOL LIFE

COPIES TO: 1 9 18 / 2 10 19 / 3 12 20 / 4 13 21 / 5 14 23 / 6 15 33 / 7 16 43 / 8 17 53

MATL SPEC: SEE NOTE

FINISH:

DRW P. CLEARY	DATE 08/24/97	SCALE 4:1
CHK	DATE	SUPER DR
APPD	DATE	FINSH GOOD WT GRAMS/PIECE

TOLERANCE UNLESS OTHERWISE SPECIFIED
ONE PLACE DEC +/-.3 — THREE PLACE DEC +/-.100
TWO PLACE DEC +/-.25 — ANGULAR +/-1°

3RD ANGLE PROJECTION

TITLE: ATO SHUNT ASSEMBLY

Littelfuse®
DES PLAINES, ILLINOIS 60016

REVISION: M

DRWG. NO. 02400094P — OUTLINE

CAD GENERATED DRAWING – NO PENCIL CHANGES ALLOWED