Tel: +1-800-832-3873
E-mail: techline@littelfuse.com
www.littelfuse.com/AF0500

AF0500

ARC-FLASH RELAY

REVISION 0-E-120817

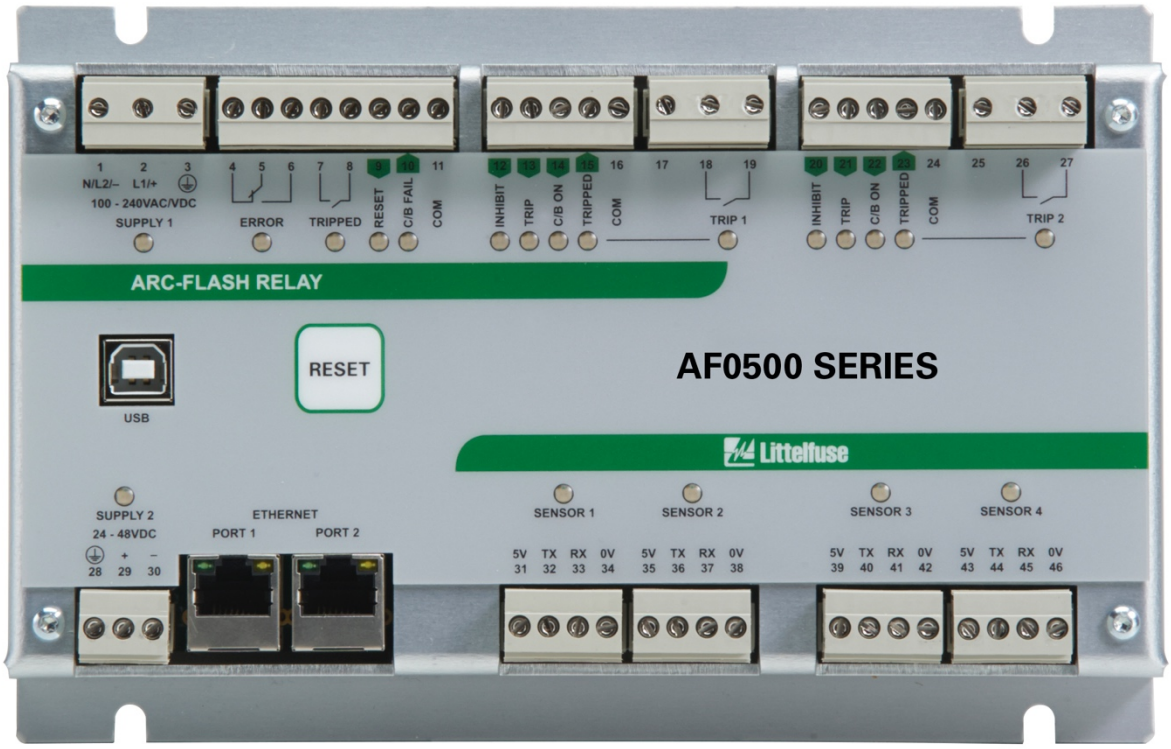

Copyright © 2017 Littelfuse

All rights reserved.

Document Number: PM-1420-EN

This page intentionally left blank.

© 2017 Littelfuse

TABLE OF CONTENTS

1 KEY FEATURES 7
1.1 Easy Installation 7
1.2 Fail-Safe Installation 8
1.3 Fast Error and Fault Location 8
1.4 Ethernet Communication 8
1.5 USB Interface 8
2 ARC-FLASH PROTECTION SYSTEM DESIGN 9
3 SENSOR PLACEMENT 12
3.1 General Guidelines 12
3.2 Switchgear Protection 12
3.3 Transformer Protection 12
4 OPTICAL SENSORS 13
4.1 PGA-LS10 Photoelectric Point Sensor with Sensor Check 14
4.1.1 PGA-LS10 Connection 15
4.1.2 PGA-LS10 Installation 16
4.2 PGA-LS20 and PGA-LS30 Fiber-Optic Sensors with Sensor Check 17
4.2.1 Fiber Connection 17
4.2.2 Receiver Wiring Connections 17
4.2.3 Transmitter Wiring Connections 17
4.2.4 PGA-LS20 and PGA-LS30 Connection 18
4.2.5 Fiber-Optic Sensor Adjustment 19
4.2.6 Sensor Adjustment For a Fiber Length Other Than 60 cm (24 in) 19
5 APPLICATION EXAMPLES 20
5.1 Basic Scenario: One Sensor – One Circuit Breaker 20
5.2 Two Independent Trip Zones 21
5.3 Two Zones Combined To One By Cabling 22
5.4 Several Zones Combined To One By Cabling 23
5.5 Upstream Circuit Breaker Trip on Local Circuit Breaker Fail 24
5.6 Main-Tie-Main using PGA-1100 Logic Diode Unit 24
5.7 Main-Tie-Main from a Dedicated AF0500 Zone 26
5.8 Total Clearing Time 26
5.8.1 Arc-Detection Delay 26
5.8.2 Circuit Breaker Operating Time 26
5.8.3 Total Clearing Time Examples 27
5.8.4 Total Clearing Time for Upstream Circuit Breakers In Case of a Circuit Breaker Failure 27
6 INSTALLATION AND TERMINALS 29
6.1 Power Supply 30
6.1.1 Line AC Supply 30
6.1.2 Station Battery DC Supply 30
6.1.3 Auxiliary DC Supply 31
6.1.4 Supply Surveillance 31
6.2 Common I/O Block 31
6.2.1 ERROR Signal Relay 31
6.2.2 TRIPPED Signal Relay 32
6.2.3 C/B Fail Output 32
6.2.4 RESET Input 32

© 2017 Littelfuse

6.3 Trip Zone I/O 32
6.3.1 INHIBIT Input 33
6.3.2 TRIP Input 33
6.3.3 C/B ON Input 33
6.3.4 TRIPPED Output 33
6.4 TRIP COIL Output 34
6.5 Sensors 34
6.5.1 Zone Association 34
6.5.2 Light Immunity Adjustment 34
6.5.3 Extending or Shortening Cable Length 35
6.6 Ethernet 35

7 USER INTERFACE 36

7.1 Reset Button 36
7.2 LED Indications 36
7.3 USB Configuration Software 39
7.3.1 USB Configuration Software – Screen Examples 40
7.4 USB Event Log 46
7.5 Firmware Upgrade 47

8 COMMISSIONING 48

8.1 Configuration of Installed Sensors 48
8.2 Testing the Sensors 48
8.3 Testing the Trip Coil Outputs and Associated Circuit Breakers 49
8.4 Full Operation Test 49

9 SUPPORT RESOURCES 51

9.1 Sending Information for Support 51

10 SPECIFICATIONS 52

10.1 AF0500 52
10.2 EMC Tests 54
10.3 Environmental Tests 55
10.4 Safety 55
10.5 Certification 56
10.6 Sensors 57
10.7 Ordering Information 58
10.8 Related Products 58
10.9 Warranty 58

APPENDIX A: MODBUS TCP REGISTER MAP 59

APPENDIX B: INSTALLATION LOG SHEET 64

APPENDIX C: REDUNDANT TRIP CIRCUIT DESCRIPTION 67

APPENDIX D: AF0500 REVISION HISTORY 68

© 2017 Littelfuse

LIST OF FIGURES

1 AF0500 Default Trip Zones 8
2 AF0500 Typical Wiring Diagram 10
3 AF0500 24-Vdc Source Typical Wiring Diagram 11
4 PGA-LS10 Detection Range for a 3 kA Fault 14
5 PGA-LS10 Connection Diagram 15
6 PGA-LS10 Mounting Detail 16
7 PGA-LS20 and PGA-LS30 Connection Diagram 18
8 Basic AF0500 Configuration 20
9 AF0500 with Two Independent Trip Zones 21
10 AF0500 with Two Trip Zones Combined 22
11 AF0500 with Several Trip Zones Combined 23
12 AF0500 Upstream Circuit Breaker Trip On Local Circuit Breaker Fail 24
13 PGA-1100 Configuration 25
14 Main-Tie-Main Using PGA-1100 25
15 AF0500 TRIP/TRIPPED Connected to Two AF0500 Units (Three Zone Units) 26
16 AF0500 Outline And Mounting Details 29
17 Fail Safe Error Indication using Multiple AF0500's 31

LIST OF TABLES

1 Circuit Breaker Operating Time 27
2 Sample Table for Testing a System 50

© 2017 Littelfuse

This page intentionally left blank.

© 2017 Littelfuse

1 KEY FEATURES

The AF0500 Arc-Flash Relay is a high-speed, arc-detection device for electrical power-distribution systems. The AF0500 has outputs for two trip coils in two zones, and has inputs for up to four optical sensors for optimal arc detection. The inputs support both point sensors and fiber-optic line sensors, which cover a larger area.

Using optical sensors rather than relying strictly on current measurement allows a much faster detection time than overcurrent relays or a circuit breaker alone can typically provide, as the light from the arc is unique for the fault, whereas current pulses above the nominal level are part of normal operation for many systems.

On the occurrence of an arc fault, the AF0500 detects the fault and pulses the trip contact in less than one millisecond, which trips the circuit breaker(s) supplying the fault. The total arcing time is effectively reduced to the mechanical opening time of the circuit breaker, typically between 30 and 75 milliseconds. This reduces the energy of the arc fault significantly, increasing worker safety, reducing fault damage, and improving uptime. Switchgear can often be simply cleaned, inspected, and put back in service after an arc fault instead of having to be replaced.

The trip contacts are solid-state switches (IGBT's), and provide fast reaction and sufficient drive capability for connection directly to circuit-breaker trip coils.

The AF0500 can be used on ac or dc electrical systems and can be powered from either an ac or dc supply, or both.

1.1 Easy Installation

The AF0500 design philosophy is to configure one or more zone units to provide arc-flash protection. Each zone unit provides two sensors, one trip coil output, and digital inputs and outputs which make it possible to combine the zone units into larger zones, or to trip an upstream circuit breaker if a local circuit breaker has failed to trip. Each AF0500 provides two zone units, which can be combined freely, with no differences if the zone units are on the same AF0500 or on different physical units. See Fig. 1. The complete configuration and "programming" of the system can be done by simply wiring the inputs and outputs marked with green arrows – no external software is needed.

To facilitate this, the zone units are equipped with digital inputs and outputs, which allow a system with multiple zones and upstream circuit breakers to be wired with no programming required. This means that in many applications, the switchboard wiring diagram can completely describe how the arc-flash system works.

The relay will automatically learn which sensors, power supplies and trip coils are connected, and will indicate an alarm if a previously connected wire breaks or is unplugged. If a configuration change is needed, the redetection process can be triggered by pressing the Reset button for three seconds. All changes to the configuration are logged in a non-volatile text log, and if needed, the installation memory can be locked and password-protected using the USB configuration software.

© 2017 Littelfuse

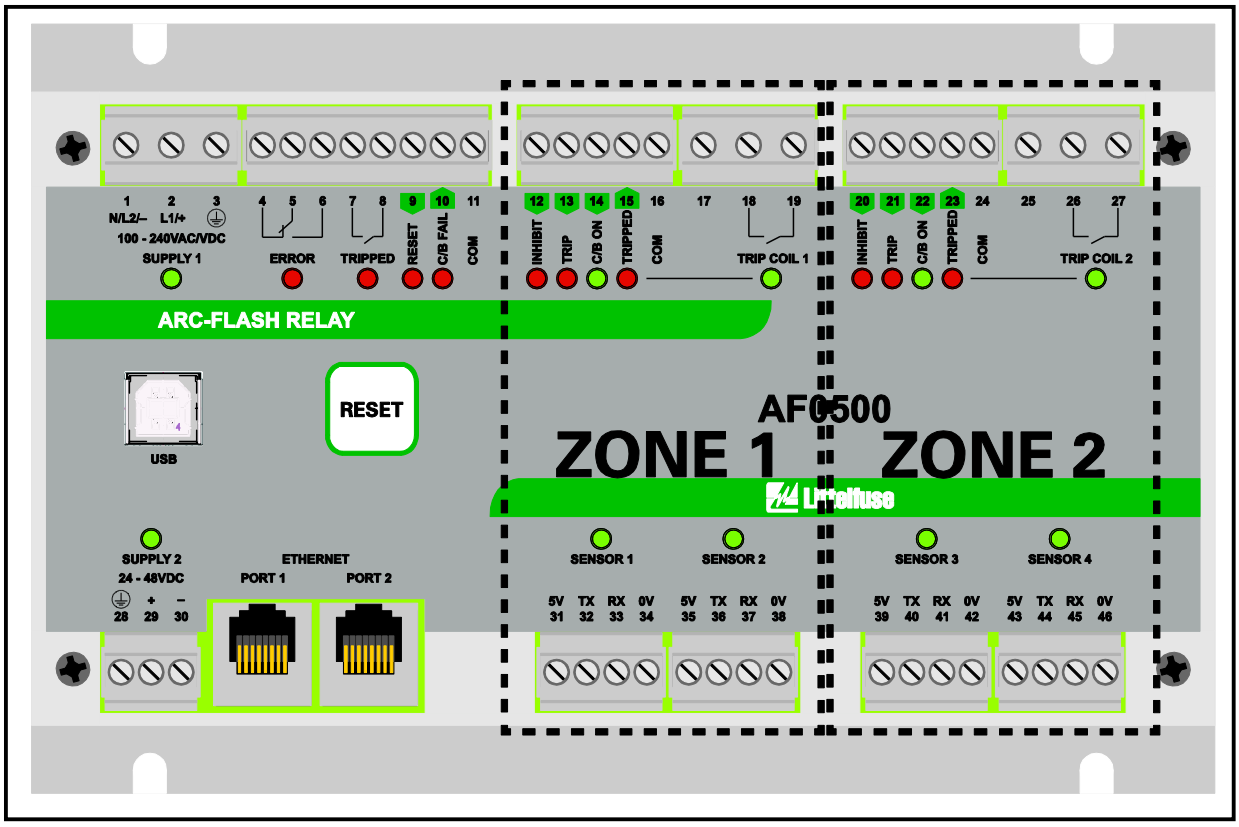

FIGURE 1. AF0500 Default Trip Zones.

1.2 Fail-Safe Operation

The AF0500 continuously monitors its internal circuitry as well as the connected optical sensors. Any system faults, including a sensor-cable fault, are indicated by an Error relay and the Error LED on the front panel. System faults are also logged locally and are available using MODBUS TCP.

A redundant trip circuit ensures that the AF0500 will trip the circuit breaker on an arc flash even if a primary trip-circuit component fails. The design of the redundant trip circuit also provides a significantly faster response to an arc on power-up (for example, after maintenance during a shutdown) than is possible with microprocessor-only relays, which is an advantage in smaller self-powered systems.

1.3 Fast Error and Fault Location

The optical sensors used with the AF0500 have built-in LED's for indication of health and for easy location of arc faults. The AF0500 also has one LED per optical sensor on the front panel to indicate which sensor(s) have caused a trip and for indicating problems in the installation.

1.4 Ethernet Communication

The AF0500 can be supervised via MODBUS TCP. This provides status information for sensors, analog inputs, digital inputs, digital outputs, and numerous event and error flags for an external SCADA system.

1.5 USB Interface

A USB interface on the front panel of the AF0500 provides easy PC access to configuration settings and access to an event log which provides detailed diagnostic information about measurements before and after a trip. No PC driver or software installation is required.

© 2017 Littelfuse

2 ARC-FLASH PROTECTION SYSTEM DESIGN

In order to find the necessary components and configuration for protecting a system, a single line diagram and knowledge of the physical configuration of the system is needed.

1. Start by identifying the number and type of sensors that are needed to have coverage of the complete system. In order to have complete coverage, all bus bar sections, circuit breaker connection points, and bolted connections must have a sensor nearby. Typically, a single point sensor per enclosed switchgear compartment is sufficient, but if a large internal component is blocking the line-of-sight, an additional sensor may be necessary. A fiber sensor can be threaded along a bus bar to protect many compartments, but only if they are interrupted by the same circuit breaker. The fiber sensor can also be used to improve coverage of compartments with many bulky components.
2. Identify which circuit breakers to open in order to completely interrupt all current to each sensor. If more sensors are isolated by the same set of circuit breakers, these are said to be in the same zone – an arc-flash event on any of these sensors will open the same set of circuit breakers.
3. Identify if the system needs coordinated tripping – if upstream circuit breakers, which trips the incoming feeder for several downstream circuit breakers, are present in the system, a decision must be made to either merge all the smaller zones and trip all circuit breakers at once (fast and cheap, but may trip more outgoing feeders than necessary), or to only trip the upstream circuit breaker if the downstream circuit breaker fails to interrupt the current (slower and costlier, but trips only what is necessary).
4. Based on the number of sensors and zones, the necessary number of outputs and sensors can be found. Each AF0500 provides two zones (two circuit breaker outputs) and two sensor inputs per zone, which can be bundled into larger zones by a single wire, and which can combine fiber and point sensors completely as needed. See Fig. 1.
5. Now, place one AF0500 trip output for each circuit breaker in the system. If there are more than two sensors per zone, connect the AF0500 zones together by connecting the “TRIP” and “TRIPPED” terminals on all zones. Zones can also be made larger by using a sensor covering a larger area, i.e. by changing point sensors to fiber sensors. Place the sensors in the cabinets, and connect them to the zone inputs. The sensor cables, which use copper wire, can be shortened or extended as needed.

NOTE: If upstream circuit breakers must be controlled, all downstream circuit breakers must be equipped with feedback switches in order to detect if they tripped. This feedback contact must be connected to the “C/B ON” input for the corresponding output. By default, the AF0500 expects a NO contact to COM such that a tripped circuit breaker connects the input to COM, but this can be configured. A failure to open a circuit breaker within the normally expected opening time will activate the “C/B FAIL” output, which must then be connected to a “TRIP” input on the upstream zone. Remember that if the system contains more circuit breakers which may fail, all C/B FAIL outputs must be connected to the upstream zone TRIP input.

© 2017 Littelfuse

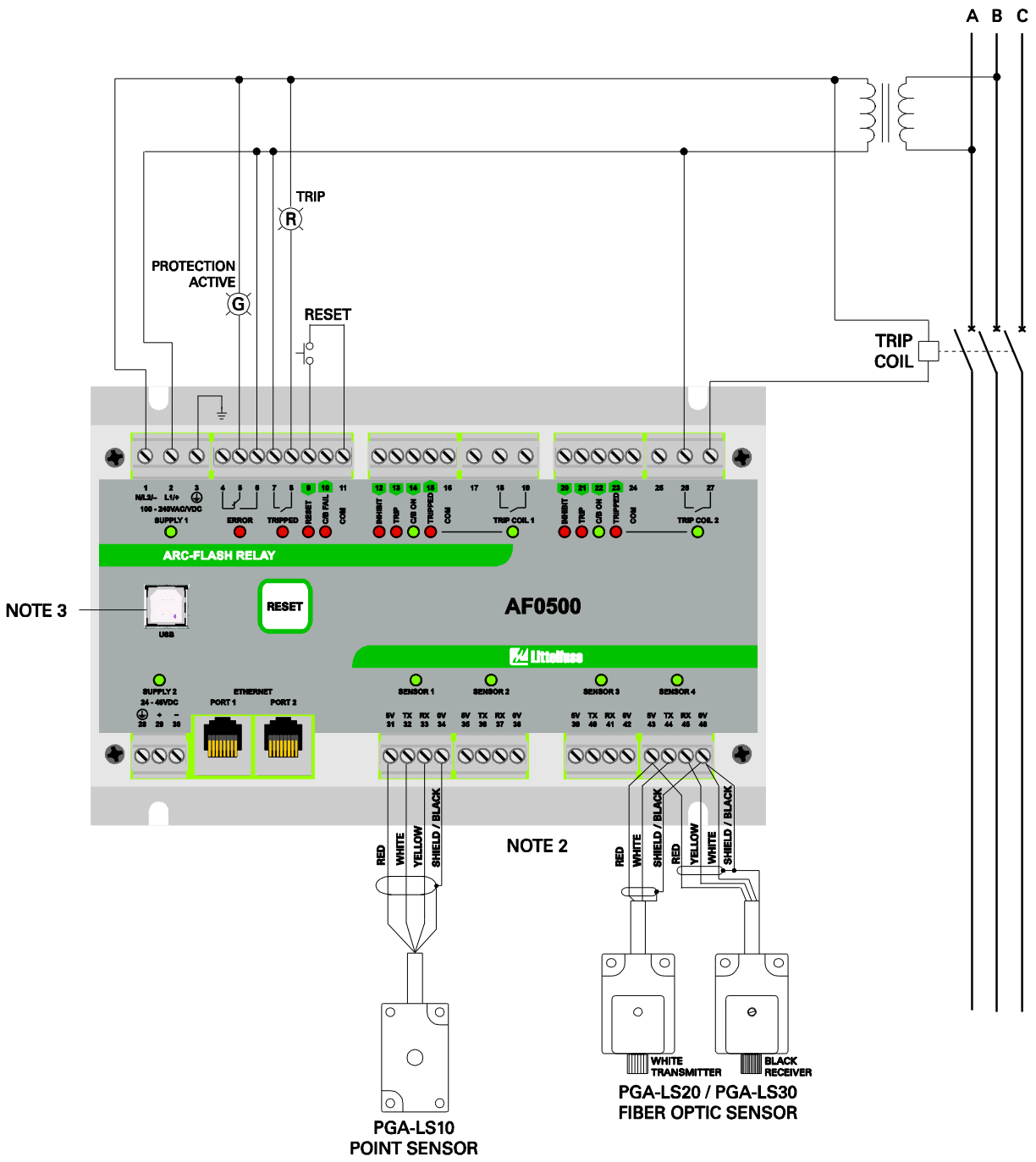

NOTES:
1. RELAY OUTPUTS SHOWN DE-ENERGIZED.
2. A TOTAL OF FOUR POINT OR FIBER-OPTIC SENSORS CAN BE CONNECTED.
3. USB 'B' CONNECTOR. FOR CONFIGURATION, SEE SECTION 7.3.
4. ALL 0V TERMINALS ARE INTERNALLY CONNECTED TO EACH OTHER, BUT ARE NOT CONNECTED TO CHASSIS GROUND (TERMINALS 3 OR 28). FOR APPLICATIONS THAT REQUIRE A GROUNDED SENSOR CABLE SHIELD, CONNECT TERMINAL 30 TO GROUND.

FIGURE 2. AF0500 Typical Wiring Diagram.

© 2017 Littelfuse

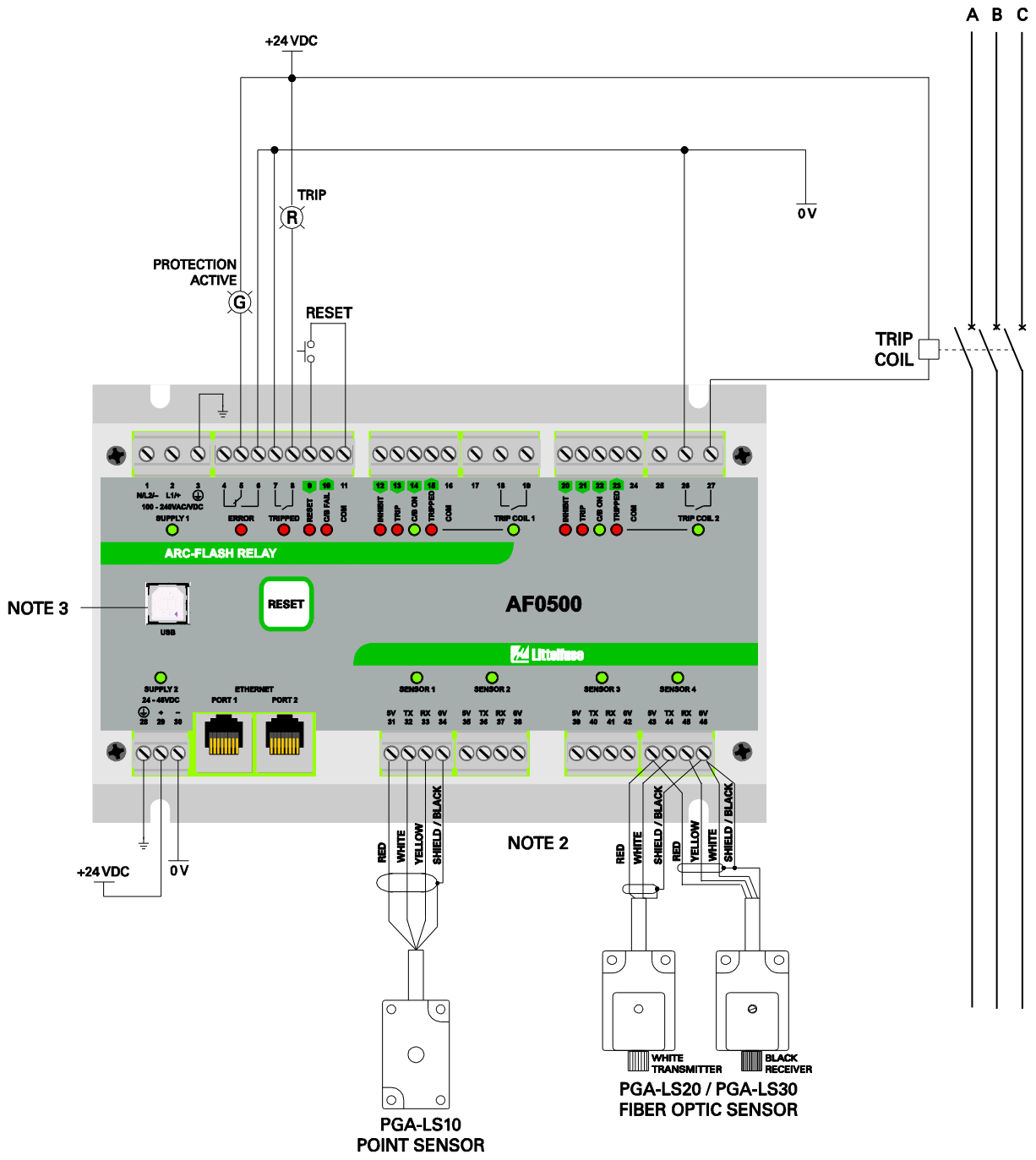

NOTES:
1. RELAY OUTPUTS SHOWN DE-ENERGIZED.
2. A TOTAL OF FOUR POINT OR FIBER-OPTIC SENSORS CAN BE CONNECTED.
3. USB 'B' CONNECTOR. FOR CONFIGURATION, SEE SECTION 7.3.
4. ALL 0V TERMINALS ARE INTERNALLY CONNECTED TO EACH OTHER, BUT ARE NOT CONNECTED TO CHASSIS GROUND (TERMINALS 3 OR 28). FOR APPLICATIONS THAT REQUIRE A GROUNDED SENSOR CABLE SHIELD, CONNECT TERMINAL 30 TO GROUND. AN ISOLATED D.C. SUPPLY IS STRONGLY RECOMMENDED.

FIGURE 3. AF0500 24-Vdc Source Typical Wiring Diagram.

© 2017 Littelfuse

3 SENSOR PLACEMENT

3.1 General Guidelines

Optical sensors should have line-of-sight to points being monitored. Ensure that the point sensors and fiber are not blocked by fixed or moveable objects. Areas that will be accessed for maintenance or with moveable parts (such as draw-out circuit breakers) should be considered a high priority for installation. Do not place sensors or cables on bare components that will be energized and avoid sharp bends in the cable, particularly when using the PGA-LS20 and PGA-LS30 fiber-optic sensors. The electrical cables and sensors should be considered to be at ground potential when determining electrical clearances.

Sensors should be mounted in a location that will minimize the chance of debris or dust build-up and with easy access for maintenance if needed. A point sensor mounted at the top of an enclosure and facing down is optimal for reducing dust build-up. It should be noted that most enclosures are metallic and the reflectivity combined with the high intensity of an arc mean that even a moderately dusty sensor will collect adequate light.

In dusty environments, sensor cleaning should be part of a regular maintenance schedule and can be performed using compressed air or a dry cloth.

3.2 Switchgear Protection

The sensors used for arc-flash detection are optical sensors. Line-of-sight between the points where an arc could occur and the sensor is optimal, but the reflectivity of metallic compartments will help in distributing the light from an arc fault in the entire cabinet.

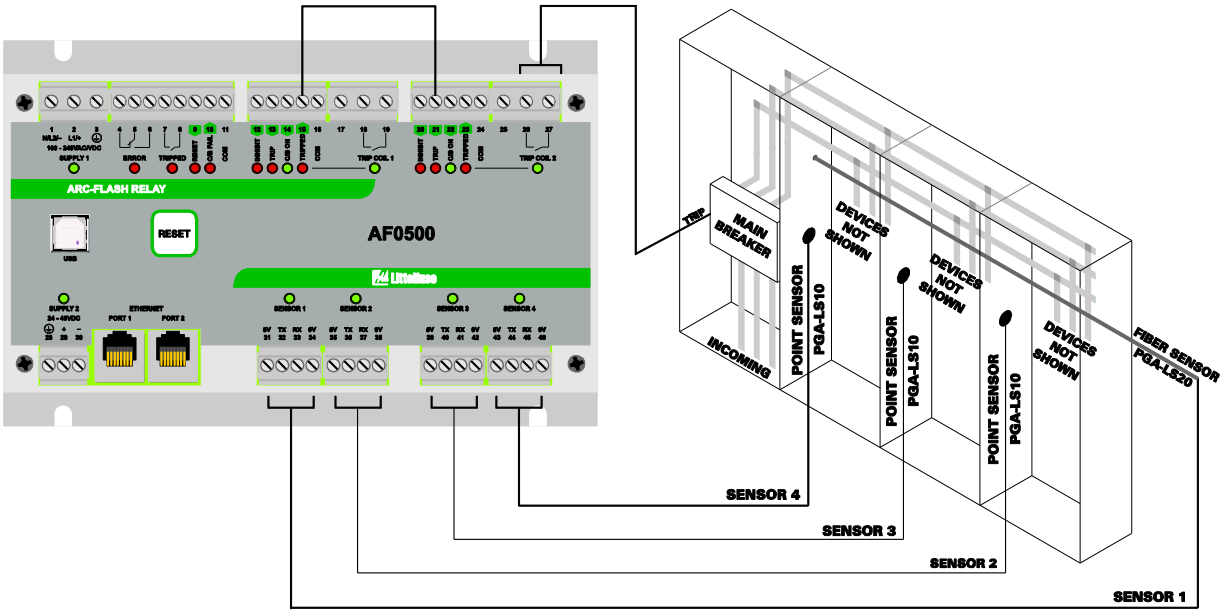

Often one point sensor is sufficient to monitor a complete switchgear compartment. However, if there are large components such as circuit breakers that cast shadows over wider areas, more than one point sensor is required.

3.3 Transformer Protection

The AF0500 can also be used for the protection of transformers. Two or more point sensors should be used per transformer to monitor the primary and secondary connection terminals. For the placement of the sensors, the same considerations apply as for switchgear protection.

4 OPTICAL SENSORS

The AF0500 has four inputs for optical arc-fault sensors.

Two sensor types are supported:

- PGA-LS10 Photoelectric Point Sensors with sensor check
- PGA-LS20 and PGA-LS30 Fiber-Optic Sensors with sensor check

The sensors can be used together, in any combination.

Both sensor types have LED indication of sensor health and fault location. A sensor-check circuit tests the sensor to verify that the sensor assembly is functioning correctly. A healthy sensor will flash its internal red LED every few seconds. A sensor that has detected an arc will indicate solid red until the trip is reset.

The sensors connect to the AF0500 with shielded three-wire 20 AWG (0.5 mm^2) electrical cable. Each sensor includes 10 m (33 ft) of cable which can be shortened or extended up to 50 m (164 ft). These cables should be considered to be at ground potential when determining electrical clearances in the cabinet.

Any connected optical sensor with circuit check will be automatically detected and cause the AF0500 to report an error if it is subsequently disconnected.

NOTE: Inserting and removing a sensor cable can cause a trip, depending on which terminals make contact first. To guard against nuisance tripping, remove the trip coil terminal blocks before connecting and disconnecting sensors, or perform the maintenance while the system is de-energized.

PGA-LS10

PGA-LS20 / PGA-LS30

4.1 PGA-LS10 Photoelectric Point Sensor with Sensor Check

This sensor has a detection area of a 2-m (7-ft) half-sphere for arcs of 3 kA or more.

A built-in LED enables the AF0500 to verify the function of the light sensor, wiring, and electronics. If the sensor does not detect the sensor-check LED, a sensor-fail alarm will occur – the ERROR relay will change state and the sensor indication LED will begin to flash. See Section 7.

The sensor includes 10 m (33 ft) of shielded three-wire electrical cable which can easily be shortened or extended to a maximum of 50 m (164 ft). Use Belden 85240 or equivalent cable (wire colors may vary).

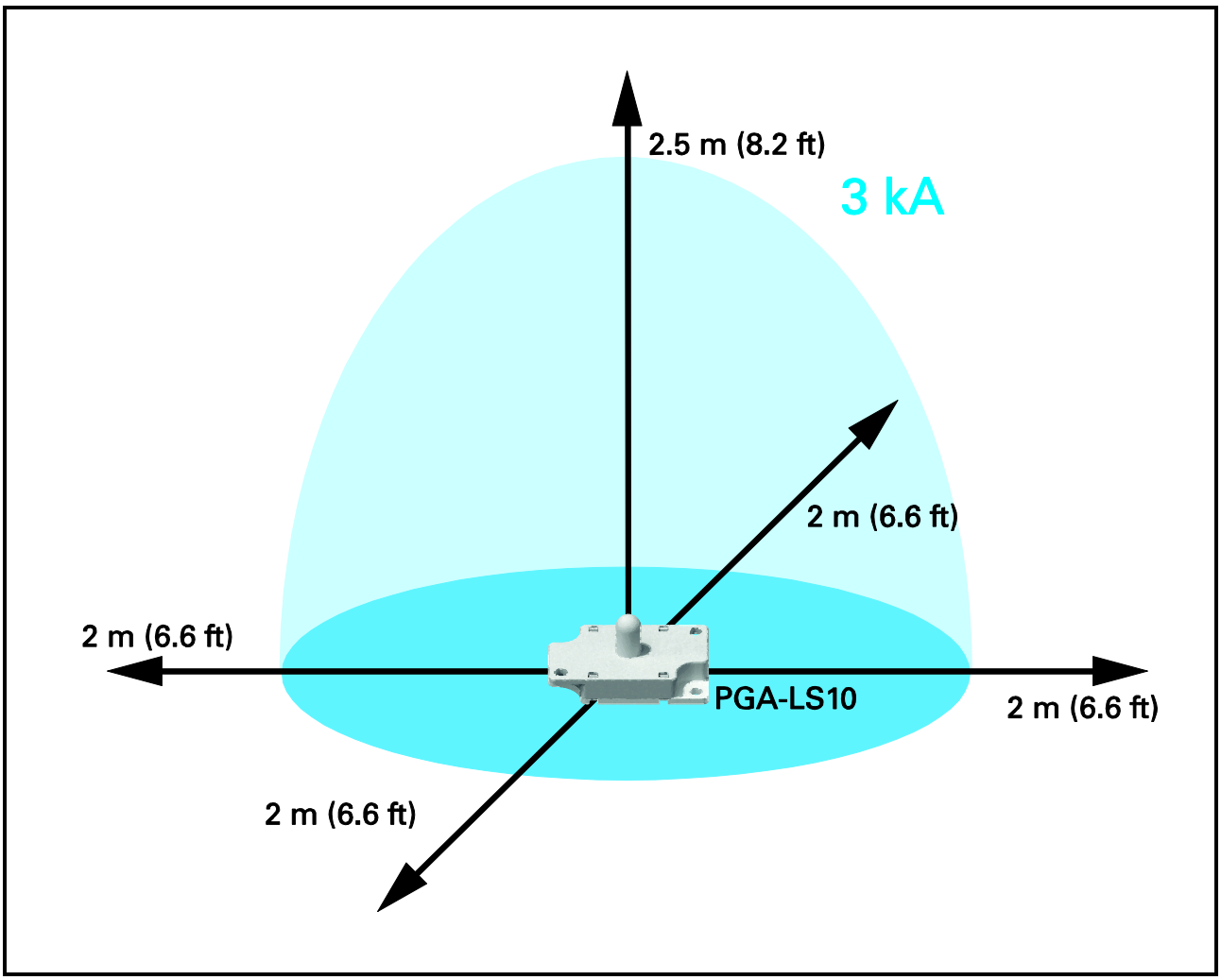

FIGURE 4. PGA-LS10 Detection Range for a 3 kA Fault.

© 2017 Littelfuse

4.1.1 PGA-LS10 Connection

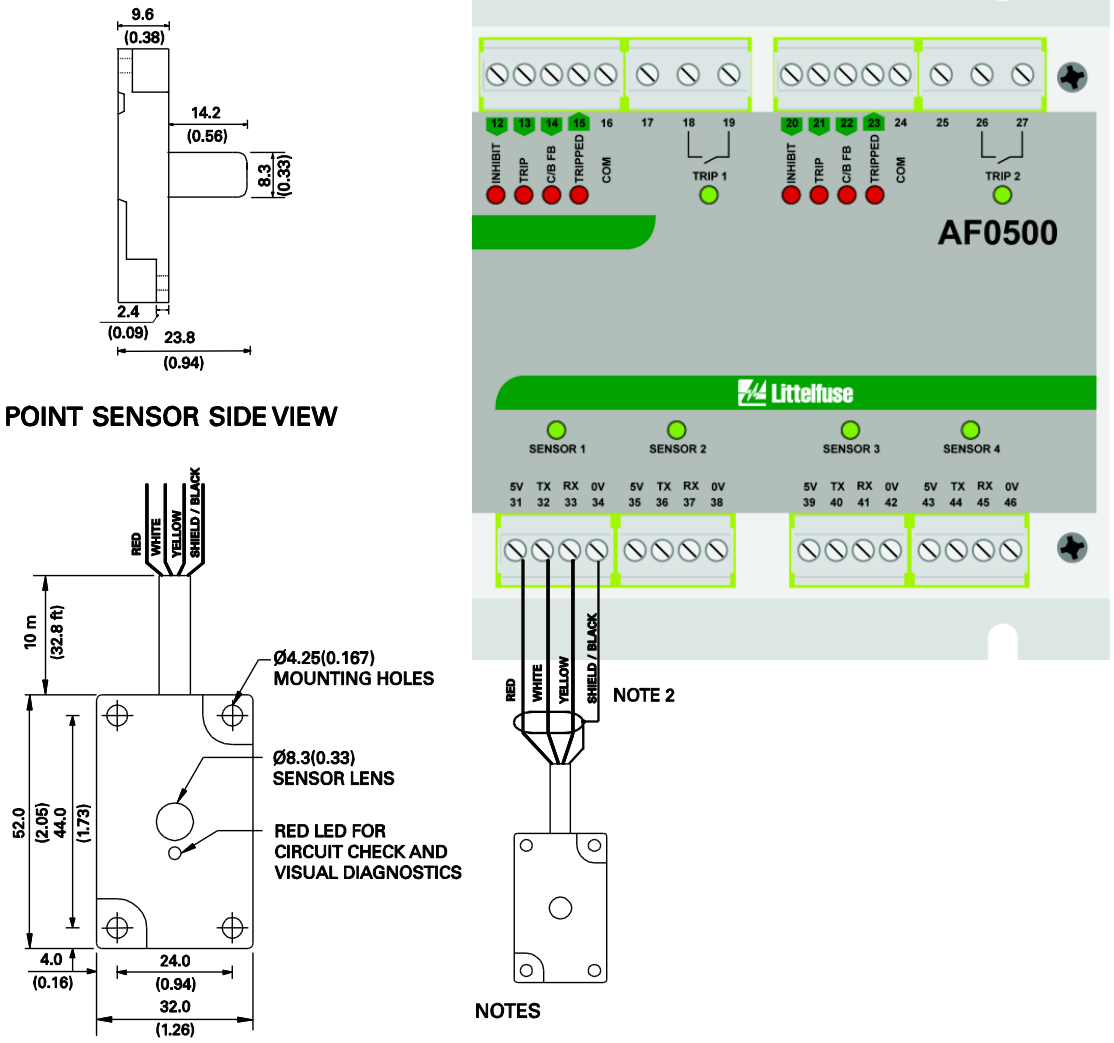

NOTES

1. DIMENSIONS IN MILLIMETERS (INCHES) UNLESS OTHERWISE STATED.
2. UP TO 4 PGA-LS10 PHOTOELECTRIC POINT SENSORS WITH BUILT-IN CIRCUIT CHECK CAN BE CONNECTED.
3. THE PGA-LS10 SENSOR SHIPS ASSEMBLED WITH A PLUG-IN CONNECTOR. IT MAY BE NECESSARY TO DISCONNECT THE PLUG-IN CONNECTOR DURING INSTALLATION.

TERMINAL	FUNCTION	COLOR
5V	SUPPLY	RED
TX	CIRCUIT CHECK TRANSMIT	WHITE
RX	RECEIVE	YELLOW
0V	SHIELD	BLACK/COPPER

FIGURE 5. PGA-LS10 Connection Diagram.

© 2017 Littelfuse

4.1.2 PGA-LS10 Installation

The PGA-LS10 point sensor includes an adhesive-backed drill template for easy surface or panel-mount installation.

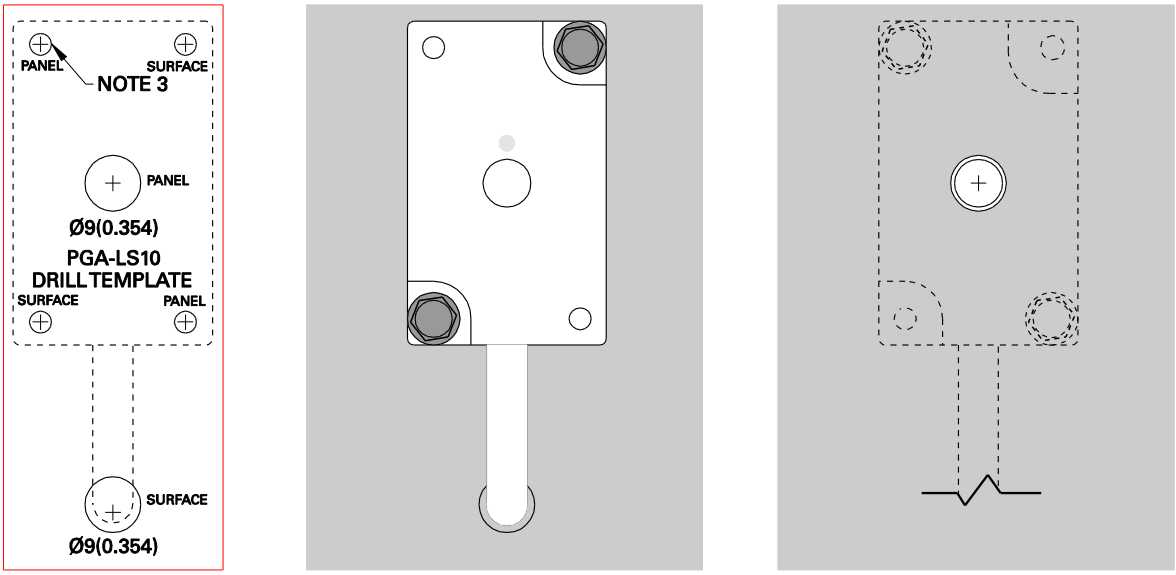

DRILL TEMPLATE

SURFACE-MOUNTED PGA-LS10

PANEL-MOUNTED PGA-LS10

NOTES AND INSTALLATION:

1. ALL DIMENSIONS IN MILLIMETERS (INCHES).
2. AFFIX THE DRILL TEMPLATE WHERE THE SENSOR IS TO BE MOUNTED.
3. MOUNTING SCREWS ARE M4 OR 8-32.
4. THE PGA-LS10 CAN BE SURFACE OR PANEL MOUNTED. SELECT THE APPROPRIATE HOLES AND DRILL THROUGH THE TEMPLATE.

FIGURE 6. PGA-LS10 Mounting Detail.

© 2017 Littelfuse

4.2 PGA-LS20 and PGA-LS30 Fiber-Optic Sensors with Sensor Check

The PGA-LS20 and PGA-LS30 sensors have a 360° detection zone along the fiber's length. A built-in LED enables the AF0500 to verify the function of the light sensor, wiring, and electronics. If the sensor does not detect the sensor-check LED, a sensor-fail alarm will occur. The ERROR output will change state, and both the LED on the front panel and the indicator LED in the sensor itself will begin to flash red. See Section 7.

The PGA-LS20 and PGA-LS30 sensors have three components:

1. A fiber-optic cable, with one end covered with a black sleeve.
    - PGA-LS20 has 8 m (26 ft) of active fiber and 2 m (7 ft) of covered fiber.
    - PGA-LS30 has 18 m (59 ft) of active fiber and 2 m (7 ft) of covered fiber.
2. A transmitter with a white enclosure and a white thumb nut.
3. A receiver with a white enclosure, a black thumb nut, and an adjustment screw behind an access hole.

Both the receiver and the transmitter connect to one AF0500 input using shielded three-wire electrical cable. All three components are monitored to ensure correct operation.

4.2.1 Fiber Connection

The fiber is the light-collecting element of the PGA-LS20 and PGA-LS30. It must be installed so it has line-of-sight to all current-carrying parts. In some cases this may be accomplished by following the bus bars along the back wall of the cabinets.

Drill holes using the included drill template and fasten the transmitter and receiver to the cabinet walls using rivets or screws. Connect the attached cables to the AF0500. The wires of the transmitter and receiver must be connected as shown in Fig. 7.

Connect the black-sleeve-covered end to the receiver using the black thumb nut, and the white uncovered end to the transmitter using the white thumb nut. Ensure the fiber is inserted completely into the transmitter and receiver and the nuts are tightened. Pull gently on the cable to verify a secure connection. The maximum pull strength of the fiber is 30 N (6.7 lb_f).

The fiber should not be sharply bent or pinched. The minimum bending radius is 5 cm (2 in). Ensure that any drilled holes are free of any sharp edges or burrs. Use grommets for further protection.

NOTE: Removing the fiber from the transmitter can cause a trip if the fiber end is pointed towards a light source, since the fiber conducts light. This can also happen if the receiver is pointing directly towards a light source without a fiber connected. To guard against nuisance tripping, remove the trip coil terminal blocks before connecting and disconnecting sensors and fibers, or perform the maintenance while the system is de-energized.

4.2.2 Receiver Wiring Connections

Connect the red wire to 5V.
Connect the yellow wire to RX.
Connect the white wire **and** the shield to 0V.

4.2.3 Transmitter Wiring Connections

Connect the red wire to 5V.
Connect the white wire to TX.
Connect the shield to 0V.

The yellow wire is not used.

© 2017 Littelfuse

4.2.4 PGA-LS20 and PGA-LS30 Connection

The sensor is shipped with the wires mounted in a terminal block. See Fig 7.

The transmitter and receiver include 10 m (33 ft) of shielded three-wire electrical cable which can be shortened or extended up to 50 m (164 ft). Transmitter and receiver cables can be different lengths and must be independently shielded. Use Belden 85240 or equivalent cable (wire colors may vary). Failure to independently shield transmitter and receiver cables can lead to an incorrect circuit check – a faulty sensor could be falsely detected as continuous. However, if there is no sensor fault, arc-flash detection will function normally in this condition.

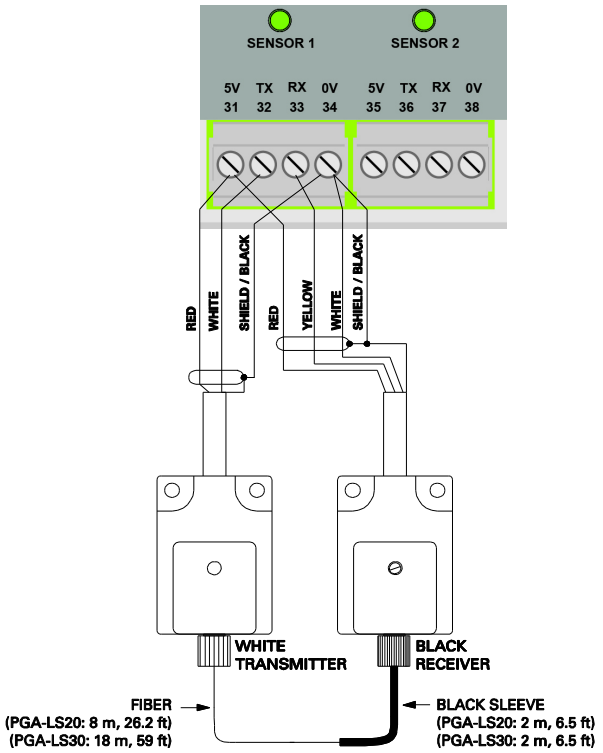

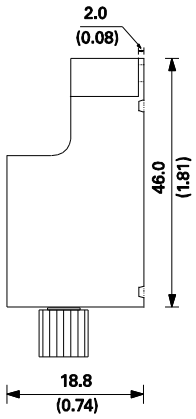

FIBER-OPTIC SENSOR SIDE VIEW

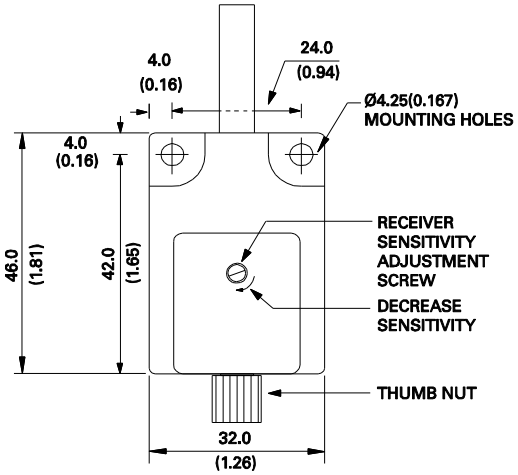

FIBER-OPTIC SENSOR TOP VIEW

NOTES

1. DIMENSIONS IN MILLIMETERS (INCHES) UNLESS OTHERWISE STATED.
2. UP TO 4 PGA-LS20 / PGA-LS30 FIBER-OPTIC SENSORS WITH BUILT-IN CIRCUIT CHECK CAN BE CONNECTED.
3. THE PGA-LS20 AND PGA-LS30 SENSORS SHIP ASSEMBLED WITH A PLUG-IN CONNECTOR. IT MAY BE NECESSARY TO DISCONNECT THE PLUG-IN CONNECTOR DURING INSTALLATION.

TERMINAL	FUNCTION	COLOR
5V	SUPPLY (TRANSMITTER AND RECEIVER)	RED
TX	SENSOR CHECK (TRANSMITTER)	WHITE
RX	SIGNAL (RECEIVER)	YELLOW
0V	SENSOR CHECK (RECEIVER) AND BOTH SHIELDS	BLACK/COPPER

FIGURE 7. PGA-LS20 and PGA-LS30 Connection Diagram.

4.2.5 Fiber-Optic Sensor Adjustment

The sensor is calibrated at the factory for 60 cm (24 in) of fiber in each monitored compartment. When using a fiber-optic sensor in compartments with less than 60 cm (24 in) of fiber, the sensitivity may have to be adjusted. The sensor is unable to differentiate between 10,000 lux on 60 cm (24 in) of fiber and 30,000 lux on 20 cm (8 in) of fiber – the same amount of light is transmitted through the fiber to the receiver. To achieve the desired sensitivity, the receiver (with the black thumb nut) must be adjusted.

4.2.6 Sensor Adjustment For a Fiber Length Other Than 60 cm (24 in)

To adjust the fiber length, a powerful light source of at least 100 lumen (e.g. 500 W halogen lamp) and a spare point sensor is required. Use the following procedure to calibrate the sensor:

1. Remove the trip coil connector to avoid tripping the circuit breaker while testing.
2. Use a point sensor to find the distance to the lamp at which the sensor just trips. Note the distance between the lamp and the point sensor (typically 15-40 cm (5.9-15.7 in), depending on the lamp).
3. Adjust the receiver (black thumb nut) sensitivity level to the minimum by turning the small metal screw clockwise until it begins to click. This may be too low to detect the sensor-check signal and may cause the related LED on the relay to flash red to signal the error. This has no implication for the rest of the procedure, since the trip signal is transmitted anyway.
4. Place the lamp facing the fiber in the compartment closest to the transmitter end (white thumb nut) of the fiber. This allows for loss along the full length of the fiber. The distance between the lamp and the fiber should be the same as the distance observed in step 2.
5. Slowly turn the metal screw on the receiver counter-clockwise until the AF0500 sensor-indicator LED for that sensor changes to red, indicating a trip.
6. Press reset on the relay, and check that the sensor indicator LED turns green, indicating that the sensor-check signal is detected, and that the fiber is thus protected by circuit check.

If the system compartment is very small, it may not be possible to adjust the fiber to provide sufficient sensitivity. Contact Littelfuse for support.

© *2017* Littelfuse

5 APPLICATION EXAMPLES

5.1 Basic scenario: One Sensor – One Circuit Breaker

No configuration necessary.

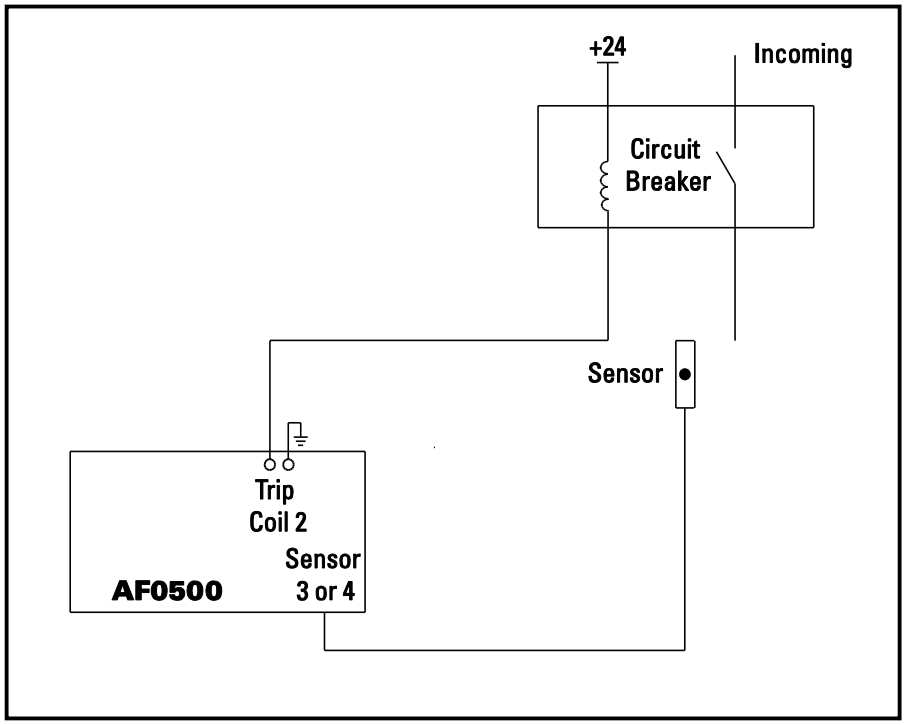

FIGURE 8. Basic AF0500 Configuration.

© 2017 Littelfuse

5.2 Two Independent Trip Zones

No configuration necessary.

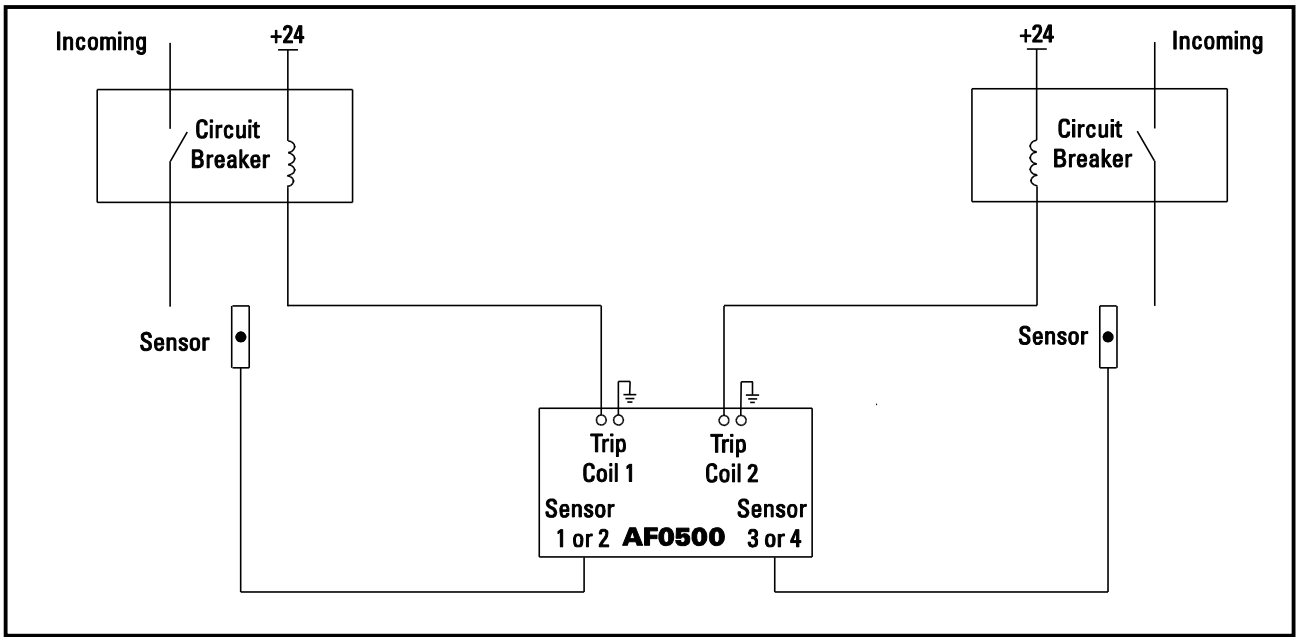

FIGURE 9. AF0500 with Two Independent Trip Zones.

© *2017* Littelfuse

5.3 Two Zones Combined To One By Cabling

No configuration necessary.

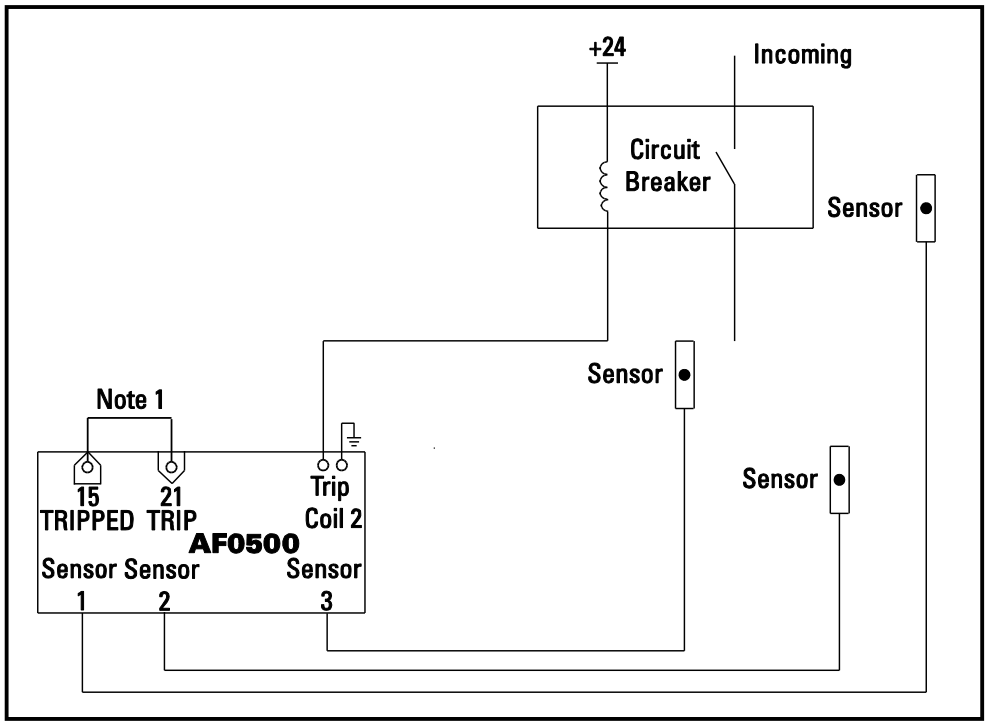

FIGURE 10. AF0500 with Two Trip Zones Combined.

The wire marked “Note 1” in Fig. 10 connects the TRIPPED output from one zone unit to the TRIP input on another. This means that the first zone will trip the other, so that either sensor 1, 2 or 3 will trip the TRIP COIL 2 output.

This could also be achieved through configuration, by assigning all sensors in the Zone 2 Settings to trip TRIP COIL 2.

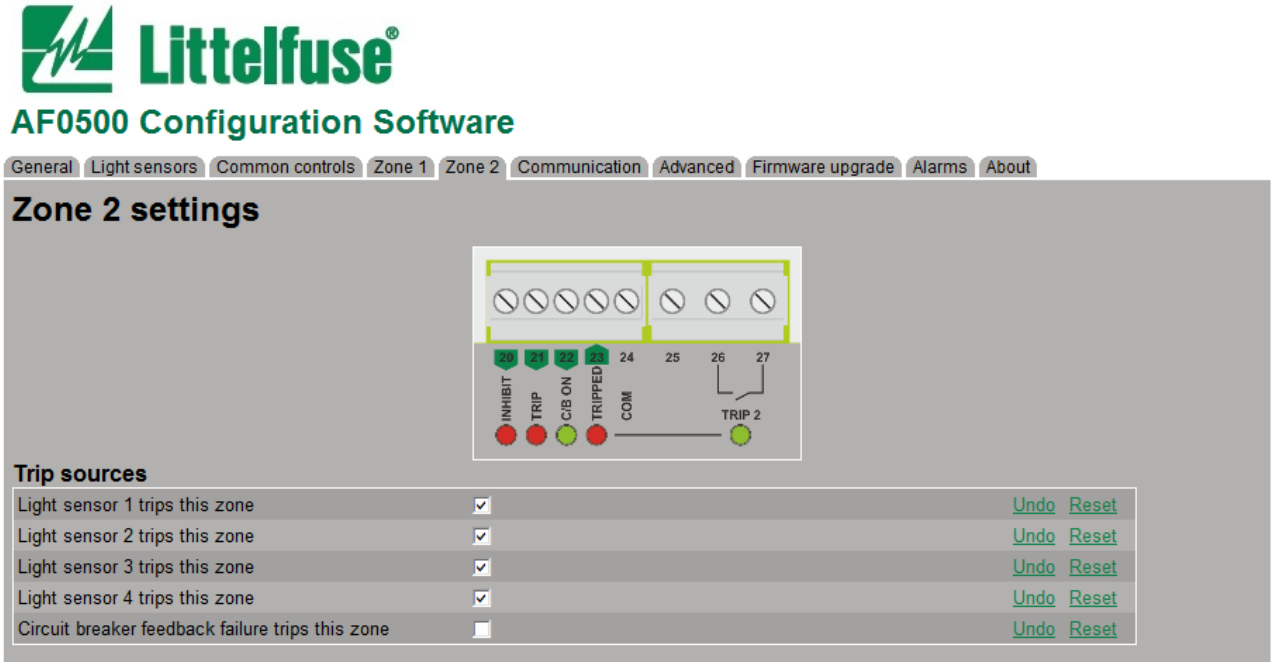

© 2017 Littelfuse

5.4 Several Zones Combined To One By Cabling

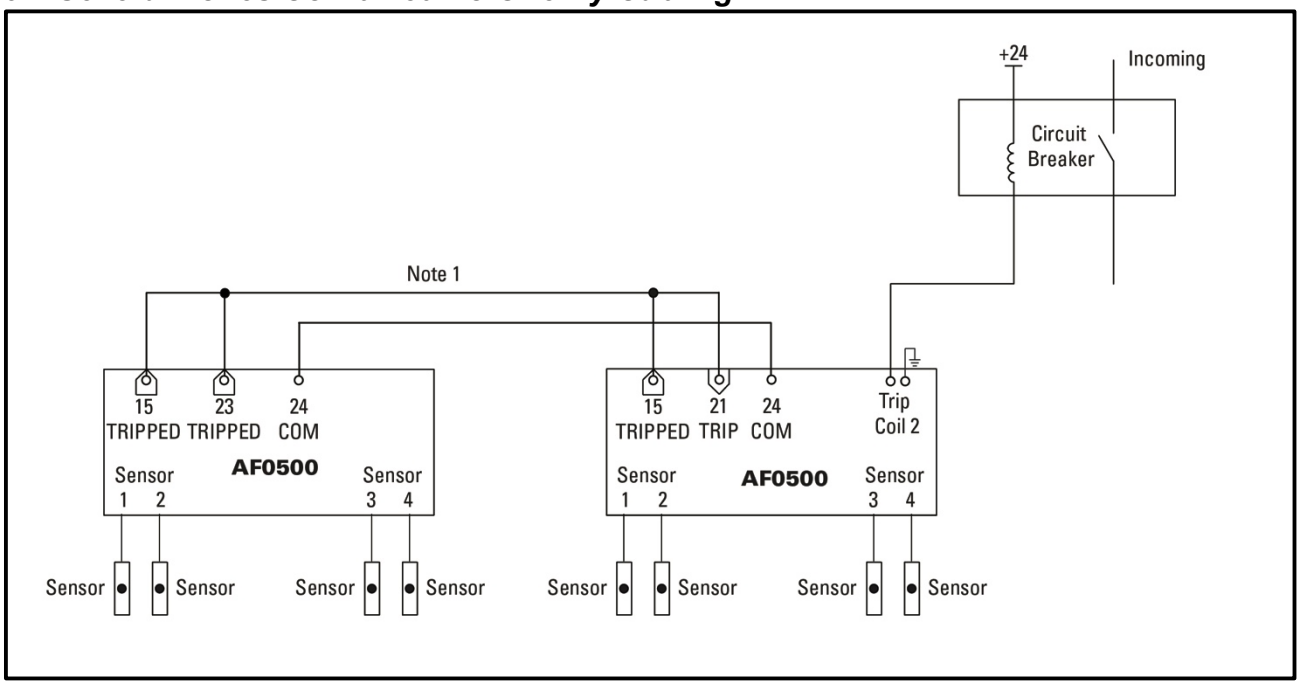

FIGURE 11. AF0500 with Several Trip Zones Combined.

The wire marked “Note 1” in Fig.11 connects all TRIPPED outputs to the TRIP input on the right-most zone. This means that any of the 8 sensors connected will trip the right-most TRIP COIL 2 output.

NOTE: Several TRIP COIL outputs can be tripped from this common zone by connecting the common wire to their TRIP inputs (terminal 13 or 21).

NOTE: If several AC-powered units are connected together, ensure that a COM terminal from each unit are also connected together.

© *2017* Littelfuse

5.5 Upstream Circuit Breaker Trip on Local Circuit Breaker Fail

No configuration necessary

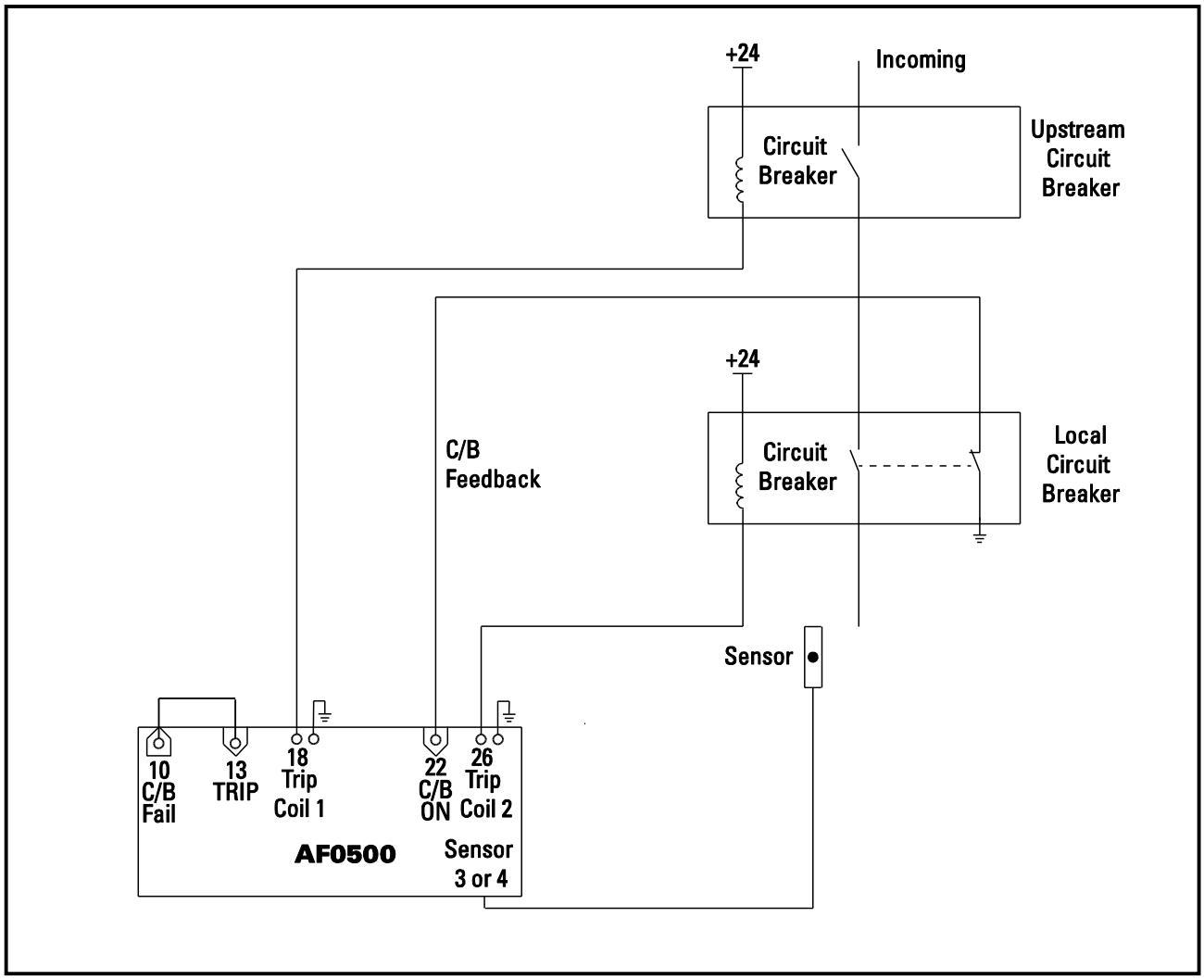

FIGURE 12. AF0500 Upstream Circuit Breaker Trip on Local Circuit Breaker Fail.

NOTE: This could also be achieved through configuration, by assigning ZONE 1 to trip on CB FAILURE.

An available auxiliary contact in a circuit breaker must be used to provide feedback of the main contact positions in order to detect that the local circuit breaker did not interrupt the current.

NOTE: The default configuration for C/B ON is a normally-closed signal, but this can be changed in the Configuration Software via USB.

5.6 Main-Tie-Main using PGA-1100 Diode Logic Unit

When several AF0500 protected zones are used and a common upstream circuit breaker should be tripped if any of the downstream zones experience a local clearing failure, the upstream circuit breaker may run out of inputs. The PGA-1100 Diode Logic Unit makes it possible to combine several trip outputs to the common circuit breaker, both for ground-return and powered circuit breakers.

© *2017* Littelfuse

The PGA-1100 contains six power diodes connected as shown in Fig. 13. Terminals 4 and 8 are common, and are always connected to the coil on the circuit breaker. If the positive supply is connected to the coil, and the contacts on AF0500 are ground returned, terminals 5, 6 and 7 are used for connecting up to three different trip sources to the breaker. If the coil has a fixed ground return, and the contacts on AF0500 are switching the positive supply, use terminals 1, 2 and 3 instead.

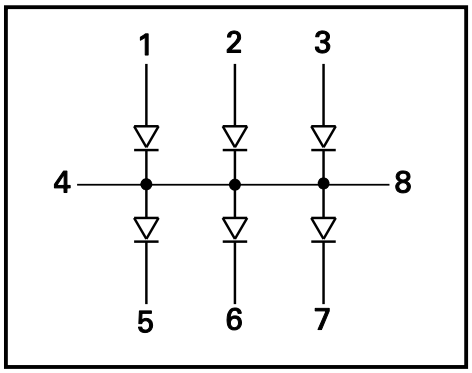

FIGURE 13. PGA-1100 Configuration.

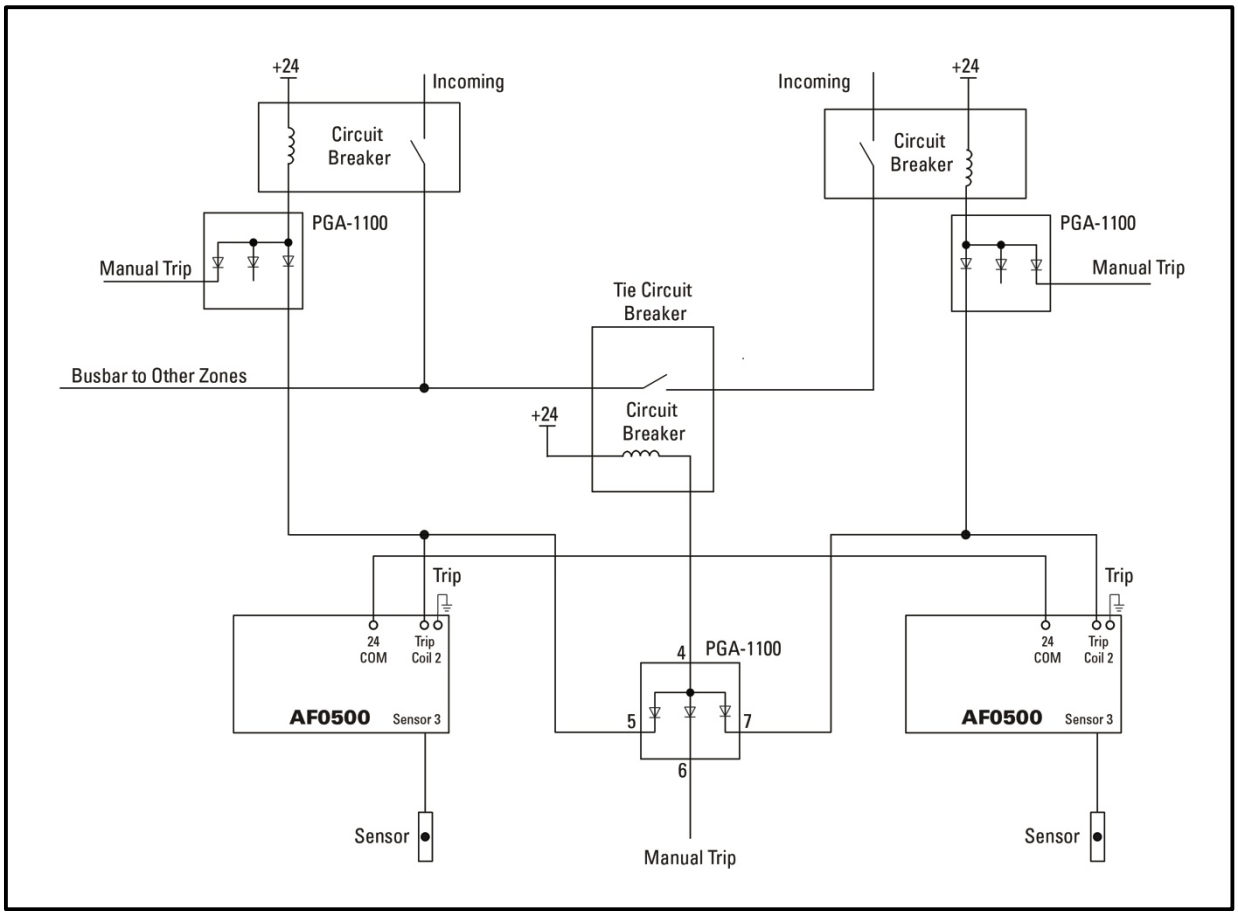

FIGURE 14. Main-Tie-Main Using PGA-1100.

Fig. 14 shows two incoming feeders and a tie circuit breaker. Each incoming circuit breaker trip coil is connected to an independent AF0500 through a PGA-1100 Diode Logic Unit. The tie circuit breaker trip coil is also connected to the trip coil of each AF0500 through a separate PGA-1100.

If a trip occurs at either AF0500, both the tie circuit breaker and the corresponding circuit breaker will trip.

© 2017 Littelfuse

5.7 Main-Tie-Main from a Dedicated AF0500 Zone

If the zones on each side are small, it is possible to implement the tie circuit breaker trip directly by wiring.

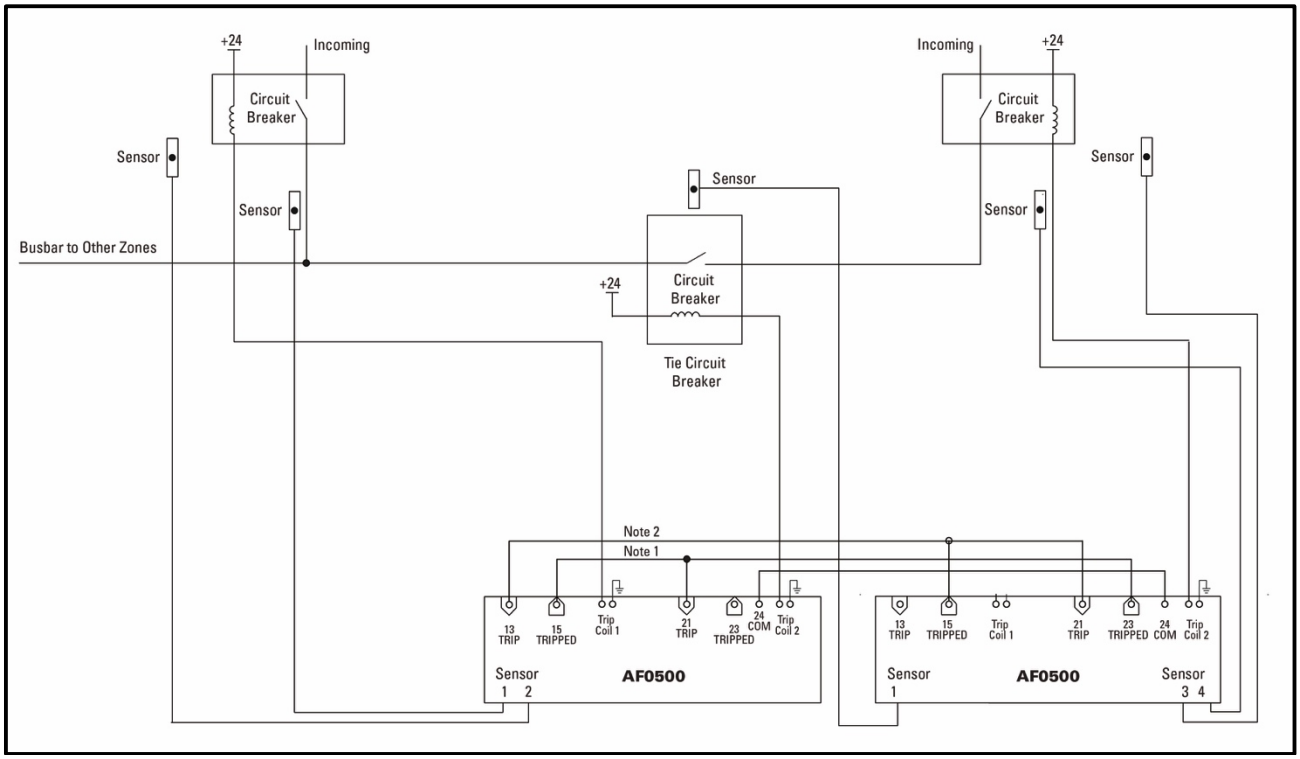

FIGURE 15. AF0500 TRIP/TRIPPED Connected to Two AF0500 Units (Three Zone Units).

The wire marked “Note 1” in Fig. 15 allows each side of the switch gear to trip the tie circuit breaker. The (optional) wire marked “Note 2” disconnects both incoming feeders in case of an arc flash in the tie circuit breaker itself. It is necessary to have two separate wires for these functions

NOTE: If the zones on each side are larger and made from several discrete zone units, connect only the wire marked “Note 1”, since the two sides can otherwise trip each other through the shared wire, or use the scheme with diode logic units detailed in Section 5.6.

5.8 Total Clearing Time

The AF0500 is capable of tripping a circuit breaker in less than 1 ms from when light hits the sensor. This is not the same as the clearing time for the fault. The arc fault will continue until the current to the fault has stopped flowing, which happens when the circuit breaker connected to the unit has reacted.

5.8.1 Arc-Detection Delay

The AF0500’s default arc-flash detection intentional delay time is 1 ms, but can be configured between 0.5 and 10 ms via the USB configuration software.

5.8.2 Circuit Breaker Operating Time

Circuit breakers have a predetermined operating time, dependent on the type of circuit breaker. Older circuit breakers have clearing times up to eight cycles, while modern circuit breakers are able to open in one to five cycles. Refer to the specifications of the installed circuit breaker.

TABLE 1. CIRCUIT BREAKER OPERATING TIME.

CIRCUIT BREAKER OPERATING TIME	50 HZ	60 HZ
8 cycles	160 ms	133 ms
5 cycles	100 ms	83 ms
3 cycles	60 ms	50 ms
2 cycles	40 ms	33 ms
1½ cycles	30 ms	25 ms
1 cycle	20 ms	17 ms

The total clearing time is:

Total Clearing Time = Arc-Detection Delay + Local Circuit Breaker Operating Time

With the AF0500, the dominating time by far is the circuit breaker operating time.

5.8.3 Total Clearing Time Examples

Example: Total Clearing Time with a 3-cycle circuit breaker

A 3-cycle circuit breaker at 50 Hz tripping due to light on an AF0500 sensor will have a total clearing time of:

1 + 60 = 61 ms

It is possible to reduce the total clearing time by installing special devices, which shunt the current away from the arc fault. These can be found with clearing times down to 1-2 ms, reducing the total clearing time down to less than 3 ms.

5.8.4 Total Clearing Time for Upstream Circuit Breakers In Case of a Circuit Breaker Failure

The AF0500 detects the operation of the circuit breaker by detecting that an auxiliary contact, mechanically connected to the main contact set, switches state. If this does not happen, the circuit breaker is assumed to have failed. This takes the same time as the opening of the contact set.

Before the AF0500 can detect that the local circuit breaker failed to clear the fault, it needs to have time to (fail to) operate. Thus, the total clearing time when the arc fault must be cleared from an upstream circuit breaker is:

Total Clearing Time = Arc-Detection Delay + Local Circuit Circuit Breaker Nominal Operating Time + Output Delay + Upstream Circuit Breaker Operating Time

Here, two new terms must be included, the delay in communicating to the upstream zone, and the operating time for the upstream circuit breaker. Again, the circuit breaker operating time dominates, especially since we now need to add both circuit breaker operating times.

The reason for still including the local circuit breaker is that this time must be programmed into the AF0500, so that it knows when to sample the CB ON input to see if the trip succeeded in clearing the fault. Only after the local circuit breaker had time to react can the signal be sent to the upstream circuit breaker.

Each interconnection wire between the AF0500 zones causes a small intentional delay of 0.5 ms. In the following, this is rounded to 1 ms. If desired, this small delay can be avoided by programming the zone to react to a CB FAIL signal in the USB configuration software. This, however, will only work for a zone in the same unit, whereas the CB FAIL signal can be wired to other units in the system. Generally, the delays in the AF0500 are inconsequential in relation to the circuit breaker operating times.

© 2017 Littelfuse

Finally, the upstream circuit breaker must obviously operate, which is added to the total clearing time.

Example: Total Clearing Time with 3-cycle breakers and a local circuit breaker fault

Two 3-cycle circuit breakers at 50 Hz, with the upstream circuit breaker tripped by connecting the CB FAIL output on one AF0500 to the TRIP input on another AF0500 zone:

1 + 60 + 1 + 60 ms = 122 ms

Example: Total Clearing Time with two-cycle circuit breakers and a local circuit breaker fault

Two 2-cycle circuit breakers, with the upstream circuit breaker tripped by a zone on the same AF0500 unit, configured via the USB configuration software:

1 + 40 + 0 + 40 = 81 ms

© 2017 Littelfuse

6 INSTALLATION AND TERMINALS

The AF0500 can be surface mounted using four 5-mm (10-32) screws, or it can be DIN-rail mounted using the optional mounting brackets (PGA-0031).

Ensure there is enough clearance around the module to allow the plug-in terminals to be removed and inserted.

Do not install modules which have been damaged in transport.

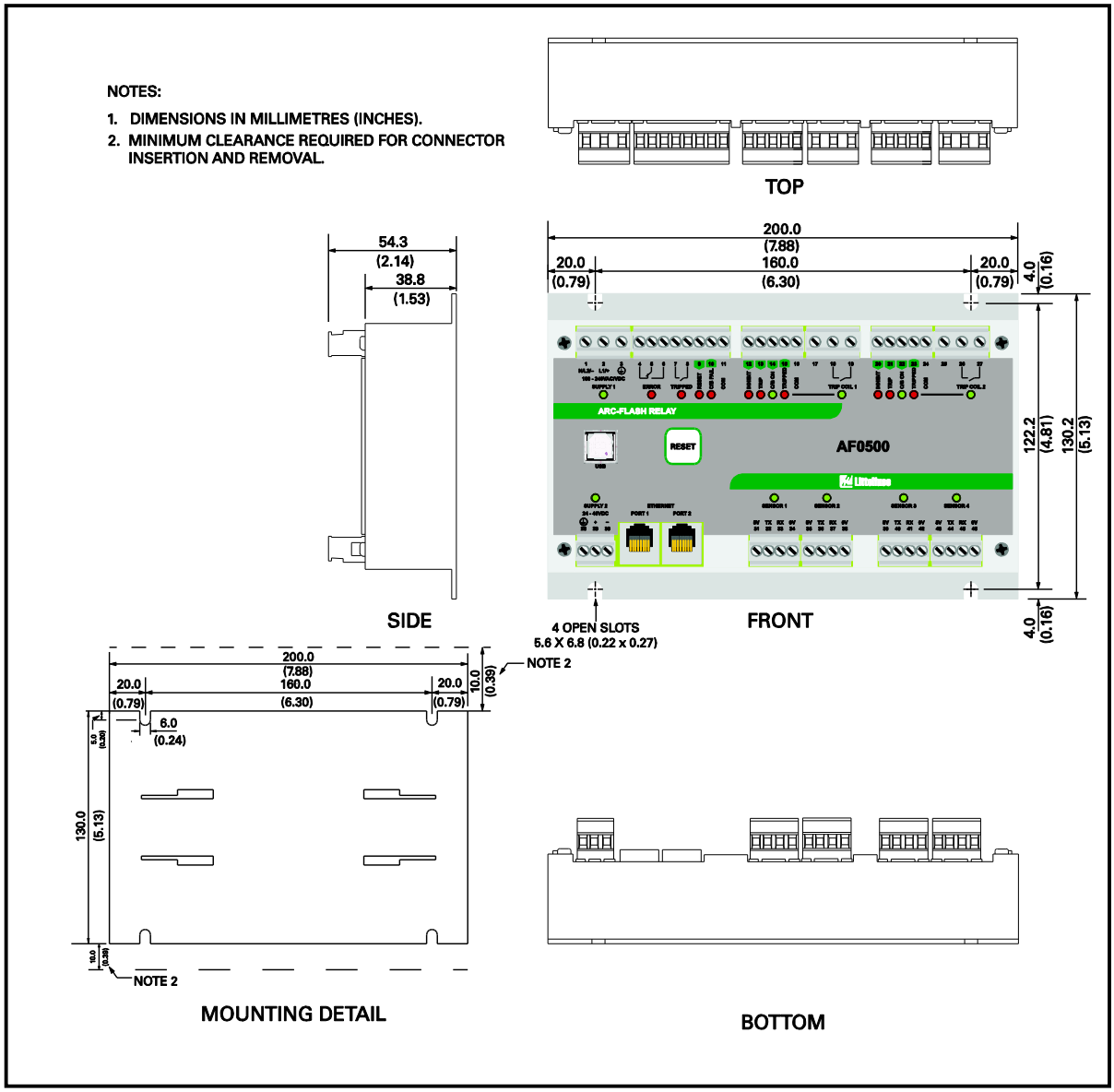

FIGURE 16. AF0500 Outline and Mounting Details.

© 2017 Littelfuse

6.1 Power Supply

The AF0500 Arc-Flash Relay can be supplied by either a high voltage ac or dc supply, an auxiliary low voltage supply, or both.

6.1.1 Line AC Supply

Connect an ac supply to terminals 1 and 2. The supply voltage must be 100 to 240 Vac.

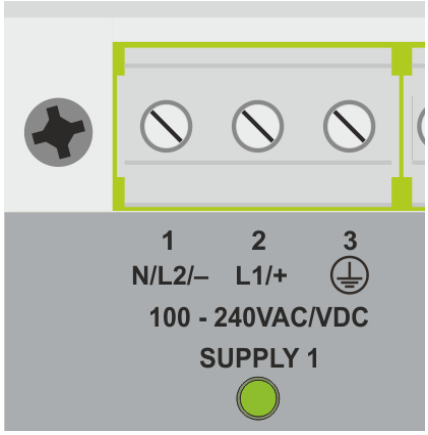

6.1.2 Station Battery DC Supply

Connect a dc supply to terminals 1 and 2. The supply voltage must be 110 to 240 Vdc.

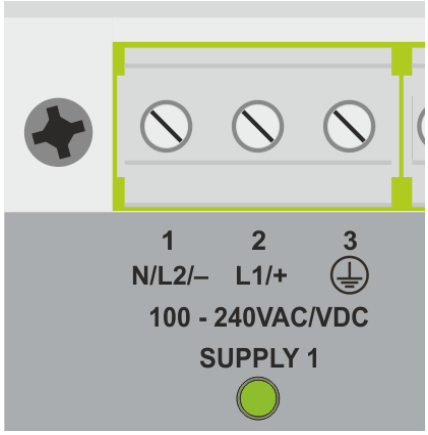

© 2017 Littelfuse

6.1.3 Auxiliary DC Supply

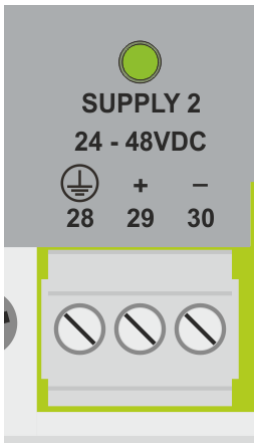

Connect a dc supply to terminals 29 and 30, ensuring correct polarity. The supply voltage must be 24 to 48 Vdc.

6.1.4 Supply Surveillance

The AF0500 will automatically learn which supplies to expect, and will indicate an alarm if one of the supplies is missing or out of nominal range. This is useful to make sure that a failure in a redundant supply is detected.

The alarm will auto-reset when the supply is re-established or can be disabled by holding the RESET button for three seconds, which will refresh which supplies are connected to the AF0500. See Section 7.1 for more information on the RESET button.

6.2 Common I/O Block

An LED provides visual indication of each output status. The output contacts are shown on the front panel in the de-energized state.

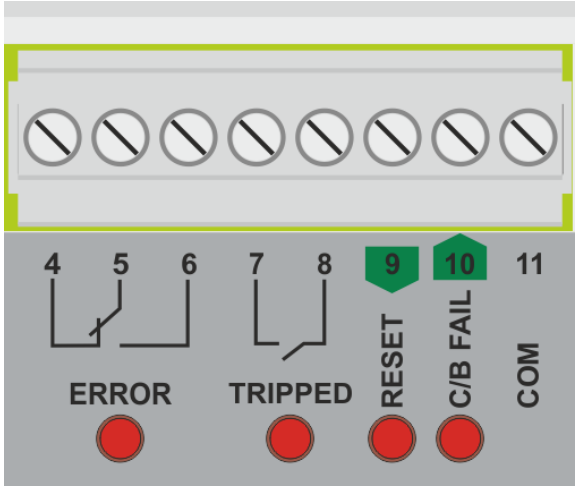

6.2.1 ERROR Signal Relay

The ERROR output signals the health of the arc-flash relay and its connected sensors and trip coils.

The ERROR output consists of an insulated electromechanical change-over contact (Form C / SPDT) on terminals 4, 5, and 6. Terminals 4 and 5 are connected when the relay is not powered or when an error exists, signalling that the protection is not active. When the relay is active and healthy, the relay is energized and terminals 5 and 6 are connected.

If an error is currently active and an additional error occurs, the ERROR output will briefly energize, then de-energize again. This is to communicate to connected equipment the error state has changed, but there are outstanding errors.

If possible, an LED on the front panel will indicate where the error is by flashing. Otherwise, the configuration software will show an overview of the current errors.

The ERROR relays of several units can be combined into one fail-safe signal by daisy-chaining terminals 5 and 6. In that way, if just one of the linked units experiences an error, the connection between the ends will be broken. Likewise, if the wire breaks, an alarm will be raised.

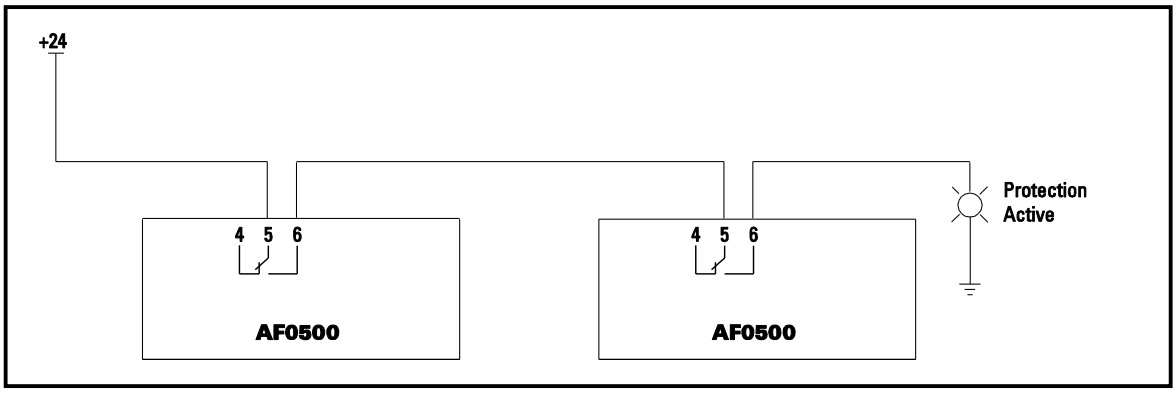

FIGURE 17. Fail Safe Error Indication using Multiple AF0500's.

© 2017 Littelfuse

6.2.2 TRIPPED Signal Relay

The TRIPPED output is used for signalling a trip condition to a remote monitoring system. It is not rated for tripping circuit breakers.

The TRIPPED output consists of a normally-open insulated electromechanical relay contact (Form A / SPST-NO) on terminals 7 and 8.

The TRIPPED output will energize if the AF0500 detects an arc fault, and will stay active until the arc-fault event is reset by pressing the Reset button. In case of a new event occurring before the first was reset, the output will deactivate and reactivate in order to generate a new alarm on connected equipment.

The TRIPPED output of several units can be combined to one by connecting terminals 7 and 8 on all units in parallel. This connection is not fault tolerant, and cannot detect a broken cable. It can be protected using parallel resistors, if the receiving equipment supports it.

6.2.3 C/B FAIL Output

The C/B FAIL output is used to signal to an upstream circuit breaker that the local circuit breaker failed to clear the fault. This is detected by requiring that the C/B ON signal is inactive within a certain timeout after the trip signal is sent to the local circuit breaker via the TRIP output. If the C/B ON signal is still active, the C/B FAIL output is pulsed.

Typically, the C/B FAIL output will be connected to the TRIP input of a zone unit at an upstream circuit breaker, tripping this to interrupt the current feeding the arc fault.

6.2.4 RESET Input

The RESET input is used as a remote reset after an arc fault has been detected.

Activating this input will reset an alarm, clear the TRIPPED and TRIP COIL outputs, and clear the indicators. The RESET input will not change the configuration of the relay, and errors cannot be cleared using this input. For this functionality, see Section 7.1.

If the reset input is permanently connected to COM, the AF0500 will auto reset immediately after a trip has occurred.

A new trip event will pulse the trip coil output regardless of its trip state.

6.3 Trip Zone I/O

Each trip zone has a block of I/O attached.

The AF0500 has three digital-input functions; inhibit, trip and C/B feedback.

By default, the inputs are considered active when connected to COM, except for the C/B ON input, which is considered active (circuit breaker conducting power) when the terminal is open circuit.

The LED's are solid ON when the corresponding terminal is active, or if it has been active in relation to a trip event, and OFF otherwise.

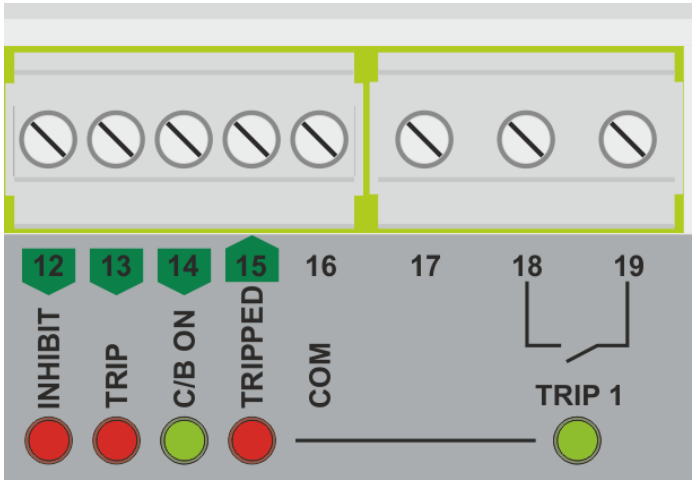

The terminals with green arrows are meant for fast communication between zone units. The

maximum delay of such a connection is less than 1 ms, which can be safely ignored in relation to the total clearing time.

The connections marked with a green arrow are not equipped with circuit check. Littelfuse recommends that the connections are kept within the same cabinet.

6.3.1 INHIBIT Input

The INHIBIT function suppresses the light sensors and TRIP input so that the circuit breaker is not tripped. The purpose could be to connect an external current sensor module for inhibiting nuisance trips.

If the INHIBIT input is activated, the AF0500 will indicate on the sensor LED that light above the threshold is being detected, but will not pulse the TRIP COIL output, nor activate the TRIPPED output. In the event log available via USB (see section 7.4), logged data will indicate a possible arc fault was detected, but not tripped due to the inhibit function.

Inhibit blocks all sources of trip from activating the trip coil output, including the TRIP input and all remote channels.

6.3.2 TRIP Input

The TRIP input is used to remotely trip the AF0500. Once activated, the AF0500 will pulse the TRIP COIL output in less than 1 ms.

6.3.3 C/B ON Input

Feedback from a circuit breaker auxiliary contact is used with the C/B ON input to detect the circuit breaker closure status. If a circuit breaker failure is detected, the C/B FAIL signal can be used to trip an upstream circuit breaker.

The polarity of the input is programmable in the USB configuration software, but in order to be fail-safe, the default configuration expects the circuit breaker to conduct power to the system when the input is open circuit. This means that a broken wire will have the AF0500 assume that the circuit breaker did not open, thus opening the upstream circuit breaker.

6.3.4 TRIPPED Output

The TRIPPED output is used to remotely trip another AF0500. It is pulsed briefly active when a trip event occurs, and the zone TRIP output is energized. If this output is connected to the TRIP input on another zone as shown in Fig. 7, zone 1 will trip zone 2 as well. If the reverse connection is made, the two zones are merged into one – any trip event in one zone will also trip the other zone. This makes it possible to e.g. extend the number of sensors tripping a single TRIP output.

© 2017 Littelfuse

6.4 TRIP COIL Output

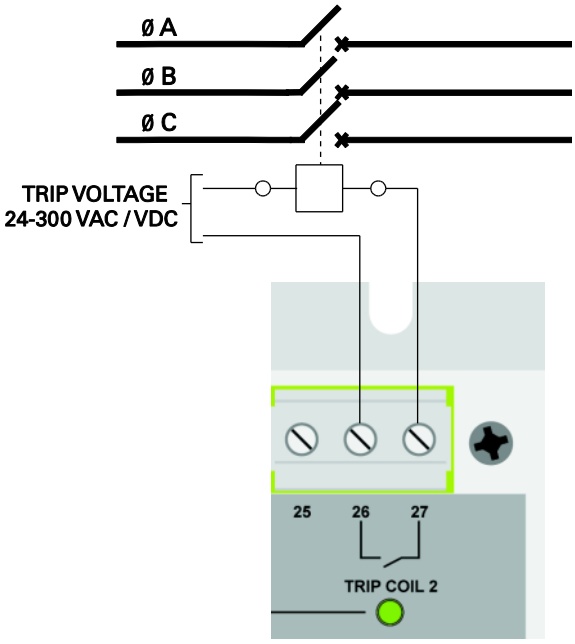

Use the TRIP COIL outputs to trip a shunt or undervoltage circuit breaker. The operating mode is programmable using the AF0500 configuration software. See Section 7.3.

The TRIP COIL output can be used for trip coils with a 24 to 300 Vac/Vdc supply voltage. The output is monitored to verify that there is voltage available to the tripping circuit. If voltage is not detected, the ERROR output will change state, and the TRIP COIL LED will flash red to indicate an error.

The TRIP COIL output is a pulsed output when in shunt trip mode. When an arc flash is detected, the TRIP COIL output is activated in less than one millisecond. The TRIP COIL output is deactivated after the adjustable pulse period delay. The output is an IGBT which can be directly connected to trip coils up to 200 VA. For detailed ratings, see Section 10.

The TRIP COIL output is galvanically isolated up to 1,000 Vac.

NOTE: The TRIP COIL output consists of a rectifier bridge and an IGBT. In combination, this creates a very fast relay-like switch which is able to trip even large circuit breakers without the added delay of a mechanical relay. There is a voltage drop of 2-4 V across the TRIP COIL output when energized.

NOTE: The TRIP COIL output functions as a momentary switch and is protected against thermal overload. It will gradually lower the time the trip coil is active if the AF0500 is tripped repeatedly.

6.5 Sensors

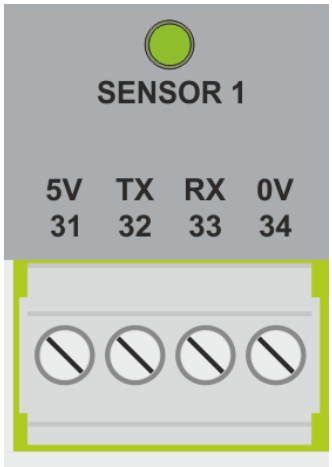

Each zone in the AF0500 is by default associated with two light sensors as shown in Fig. 1. In the USB configuration software, this assignment can be changed if desired. It is also possible to connect the zones together by wiring the TRIPPED output from one zone to the TRIP input in the other zone. In this case, the first zone will only trip the second zone.

6.5.1 Zone Association

The zone association can be changed in the USB configuration software, which allows any sensor to be associated with any output.

It is possible to associate e.g. sensor 4 with trip 1, and sensors 1-3 with trip 2, but it can easily cause confusion. We recommend keeping the standard configuration if it is at all possible in the application.

Zones can also be combined by wiring their TRIPPED outputs and TRIP inputs together. This creates a larger zone with more sensors and outputs, which will trip together. See application examples in Section 5.

For information on using the USB configuration software, see Section 7.3.

© 2017 Littelfuse

6.5.2 Light Immunity Adjustment

By default, the sensors will signal an arc-fault event if the light intensity is above approximately 10 klux. The light intensity from an arc fault is very high, typically in the area of 1 Mlux, and the choice of 10 klux is mostly a compromise between being sufficiently above normal light levels (about 1 klux in a very well lit office environment) and the need to be able to test the system with a manageable light source such as a flashlight.

The immunity level can be changed up to 25 klux via the USB configuration software. For information on using the USB configuration software, see Section 7.3.

This may be required for applications with powerful work lights or regulation requirements for the trip level.

The light sensors are not usable outdoors or in direct sunlight, as the intensity in direct sunlight will saturate the sensors.

6.5.3 Extending or Shortening Cable Length

Both point and fiber sensors are delivered with 10 m (33 ft) of three-wire shielded cable. If the installation requires it, these cables can be shortened or extended up to 50 m (164 ft). See Sections 4.1 and 4.2.4.

Do not combine several sensor cables within the same shield. Do not combine the cables to transmitter and receiver for the fiber sensors within the same shield.

6.6 Ethernet

The AF0500 is equipped with two 10/100 BaseTX Ethernet ports. An internal Ethernet switch connects both ports logically to each other and to the processor of the unit.

The Ethernet ports provide SCADA access to the unit status and measurements via MODBUS/TCP on port 502.

See appendix A for memory map.

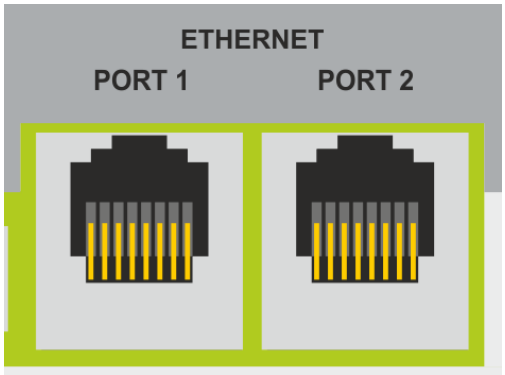

© 2017 Littelfuse

7 USER INTERFACE

7.1 Reset Button

The RESET button on the front panel of the AF0500 has two functions: A momentary press will reset any trip events, and holding the button for three seconds will reset and refresh the configuration of the AF0500 with regard to the sensors, trip coils, and power supplies currently present. Sensors, trip coils and power supplies can be added at any time, but once a connection is detected, its removal will cause an alarm.

Pressing the reset button will reset trip indications and error indications for any existing error. The error indication will remain if the error is still present and cannot be reset, e.g. if a sensor is missing or a supply voltage is outside the specification.

Holding the reset button for three seconds will reset the current list of connections to the unit. The AF0500 will then redetect which sensors, trip coils, and power supplies are connected, which will clear the alarms. Do not do this until the reason for the alarm is known, and has been rectified.

If password protection is enabled in the USB configuration, resetting the list of connections is not allowed. In this case, use the USB configuration software to reset the alarm.

Holding the reset button for 10 seconds will reset the internal drives to factory defaults. This does not affect the configuration or the log, but does imply a reset of the connected sensors as detailed above.

7.2 LED Indications

Input LED's follow the input state, and provide no information on the history. Since all digital outputs are pulsed, the LED's indicate if the output has been activated since the last reset. Blinking LED's on the front panel indicate errors e.g. an expected sensor is missing, etc. To reset the expected state, use the RESET button.

SUPPLY 1 and 2 (Terminals 1 to 3 and 28 to 30, respectively)

On, green	Supply voltage is connected.
Flashing green	Supply voltage on this terminal has previously been detected, but is now missing, or the connected supply is outside the specifications.
Off	Supply voltage is not connected.

ERROR Relay (Terminals 4 to 6)

On, red	An error has been detected, and the ERROR relay has been de-energized. If another LED is flashing, use this to localize the error and correct the problem. The event log or the USB configuration software can also be used to show the cause for the alarm, see section 7.3.
Off	No errors detected.

The LED will not always follow the internal contacts. The ERROR relay will be in the state shown on the front panel when power is not connected, and will energize if no errors are detected. The relay will de-energize on errors, and if power is removed. The ERROR relay will furthermore give a one second pulse if an additional error is detected while errors are already present. Use the event log, available via USB, to get more information on the errors present. See Section 7.4.

TRIPPED Relay (Terminals 7 to 8)

On, red	A TRIP output is or has been active due to an arc-flash event. Press RESET to clear the trip.

© 2017 Littelfuse

Off	No unacknowledged trips.

The LED will not always follow the status of the internal contacts. The TRIPPED relay is shown on the front panel in its de-energized state, and will energize on a trip event, and de-energize on reset. The TRIPPED relay will also pulse for one second if an additional trip happens before the previous event was reset. Use the event log, available via USB, to get more information about the history of the trip. See Section 7.4.

RESET Input (Terminal 9)

On, red	RESET input or another reset source (RESET button or MODBUS) is active.
Off	RESET input is inactive.

The reset button is blocked during trips. If the RESET input or the MODBUS reset register is permanently activated, errors and trips will be reset as soon as they are cleared or completed.

C/B FAIL Output (Terminal 10)

On, red	A circuit breaker did not trip as expected. The C/B FAIL output is or has been active. Press RESET to clear the trip.
Off	No C/B failure is detected.

INHIBIT input (Terminals 12 and 20)

On, red	INHIBIT input is active. The zone will not trip, even if a sensor or a trip input is activated. The sensor LED's will turn red on such a trip, and can be reset by pressing the RESET button.
Off	INHIBIT input is inactive

TRIP Input (Terminals 13 and 21)

On, red	TRIP input is active.
Off	TRIP input is inactive

C/B ON Input (Terminals 14 and 22)

On, green	The connected circuit breaker is conducting power.
Off	The connected circuit breaker is not conducting power.

TRIPPED Output (Terminals 15 and 23)

On, red	The TRIPPED output is or has been active. Press RESET to clear the trip.
Off	The TRIPPED output is inactive.

TRIP COIL 1 and 2 (Terminals 18 to 19 and 26 to 27, respectively)

On, green	The TRIP output is ready and detects a valid trip voltage in Shunt mode, or is configured as Undervoltage trip coil.
Flashing red	An error has been detected. The connection to the trip coil may be broken. If this trip coil is not meant to be used, press and hold the RESET button for a few seconds.
On, red	The TRIP output is or has been active. Press RESET to clear the trip.
Off	The TRIP output is not configured to trip, and no trip coil has been detected.

Sensors

On, green	The sensor input is active and has a functional sensor connected.
On, red	The sensor caused a trip event. If no TRIP COIL outputs are red, the trip may have been inhibited; see the event log. The LED in the sensor will also be solid red. Press the RESET button to clear the trip.
Flashing red	The circuit check of the sensor failed; check the wiring and that fiber sensors are fully seated in the thumb screws. If possible, the LED in the sensor will also be flashing red. If a sensor has been removed temporarily or on purpose, press and hold the RESET button for a few seconds to redetect the state. If adjustments have been made to the fiber sensitivity, see Section 7.1.
Off	The input has not detected a connected sensor. The input will by default still be active.

PGA-LS10, PGA-LS20 and PGA-LS30

Flashing Red	The sensor is operating normally.
On, red	The sensor caused a trip event.
Off	The sensor is unplugged or faulty, or the AF0500 is without power (check the wiring and that fiber sensors are fully seated in the thumb screws).

© 2017 Littelfuse

7.3 USB Configuration Software

To access the configuration software, plug in a USB connector and connect to a Windows[1] computer.

After a few seconds, two new drives appear:

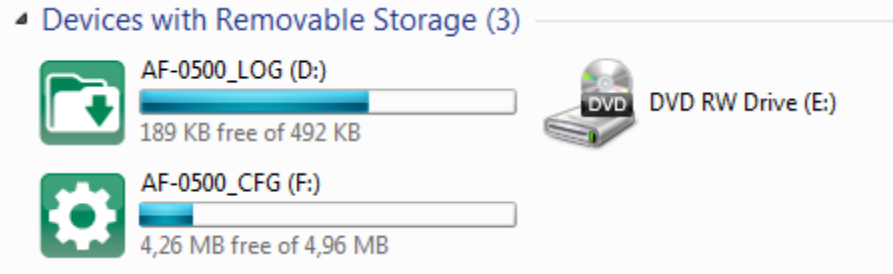

Open the Configuration drive, and double click on the file named 'config.hta'

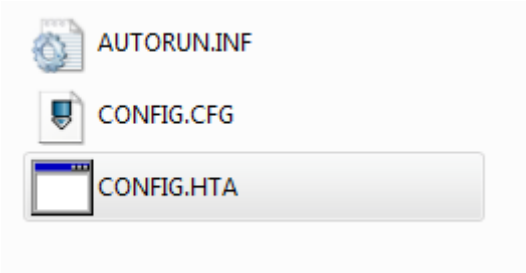

The configuration software will now open.

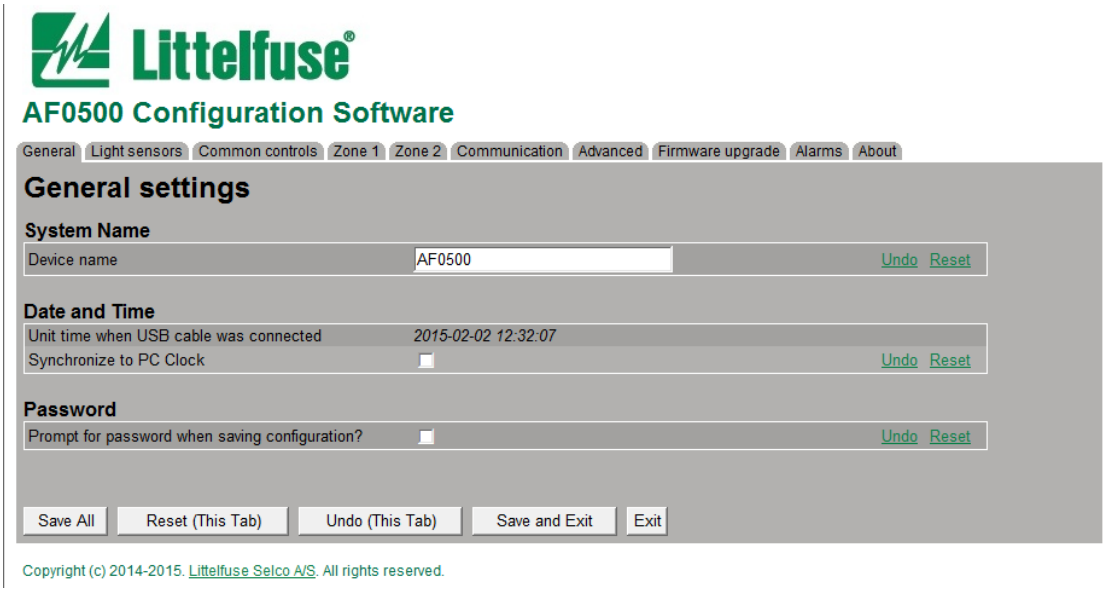

Tabs show each logical section of the relay.

Hovering above each setting will display the valid limits for the setting.

Press the Save button and remove the USB connector to let the AF0500 read the new configuration.

NOTE:

[1] All Microsoft Windows versions from and including Windows XP are supported. Some corporate networks may disallow HTA applications, in which case you should contact your system administrator to allow local HTAs to run.

It is not possible to view live data from the unit via USB. The values shown for e.g. IP address and sensor state are the values at the moment the USB connector was plugged in. Setting the password in the USB configuration software will prevent the list of connected devices from being reset via the reset button on the front panel.

7.3.1 USB Configuration Software – Screen Examples

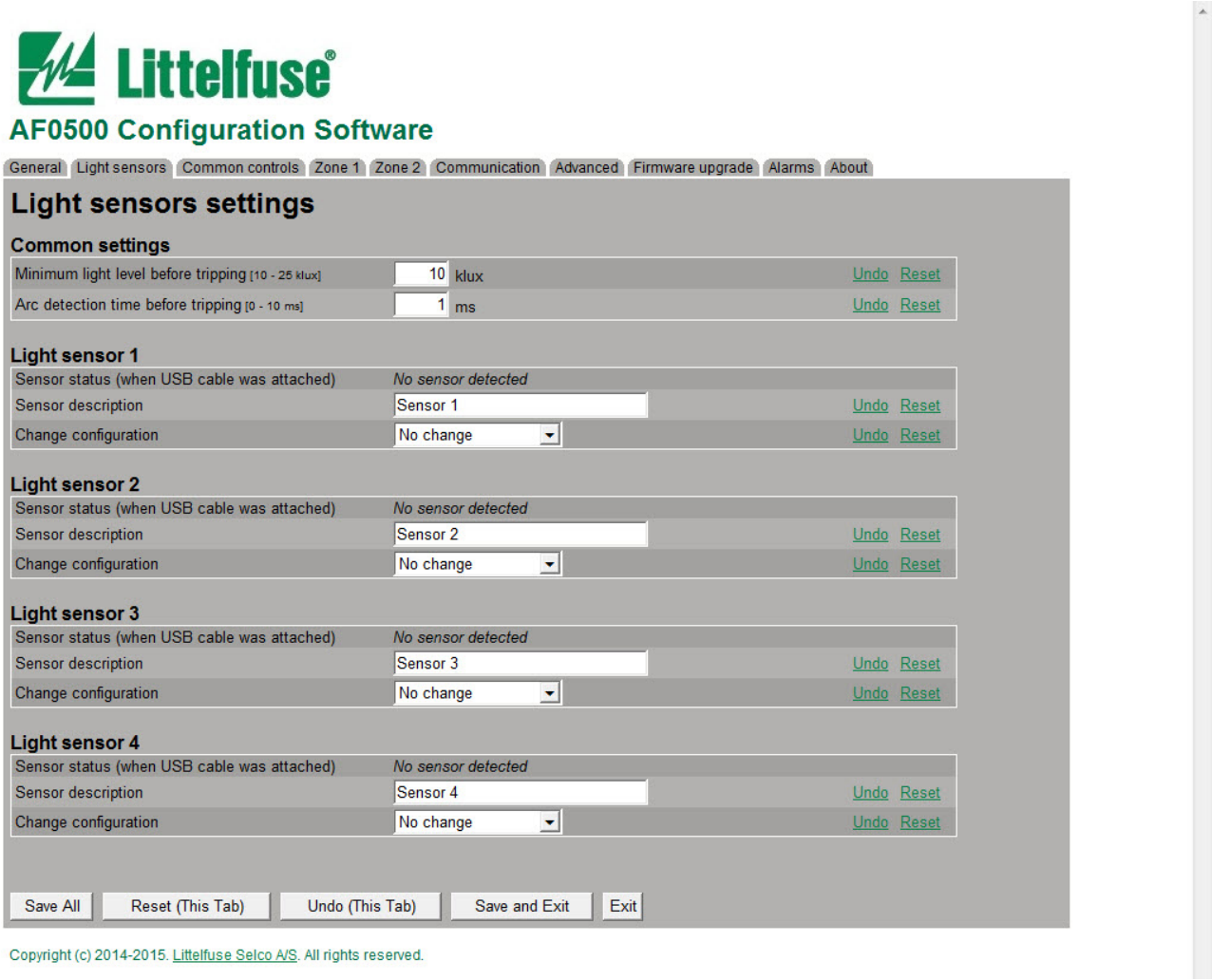

Littelfuse

AF0500 Configuration Software

General | Light sensors | Common controls | Zone 1 | Zone 2 | Communication | Advanced | Firmware upgrade | Alarms | About

Common controls

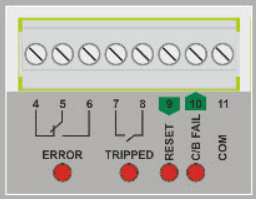

RESET button

Press to reset trip condition and resettable alarms.
When pressed and held for > 2 seconds, the expected sensors, circuit breakers, and power supplies is configured to match the currently detected devices.
Please note, when configuration is password protected long pressing the RESET button is ignored.

ERROR relay

Nothing to configure
Terminals 4 and 5 are connected when the AF0500 is not powered or has detected an error. In normal operation, terminals 5 and 6 are connected.
Deactivates on errors (including power failure). Will activate in a brief pulse on later errors

TRIPPED relay

Nothing to configure
Terminals 7 and 8 are connected when the unit has tripped.
Activates on a zone trip, deactivates on Reset. Will deactivate in a brief pulse on later trips.

RESET input

Nothing to configure
Activated when low

C/B FAIL output

Nothing to configure
Activates (pulses low) on CB failure in any zone

Save All | Reset (This Tab) | Undo (This Tab) | Save and Exit | Exit

Copyright (c) 2014-2015. Littelfuse Selco A/S. All rights reserved.

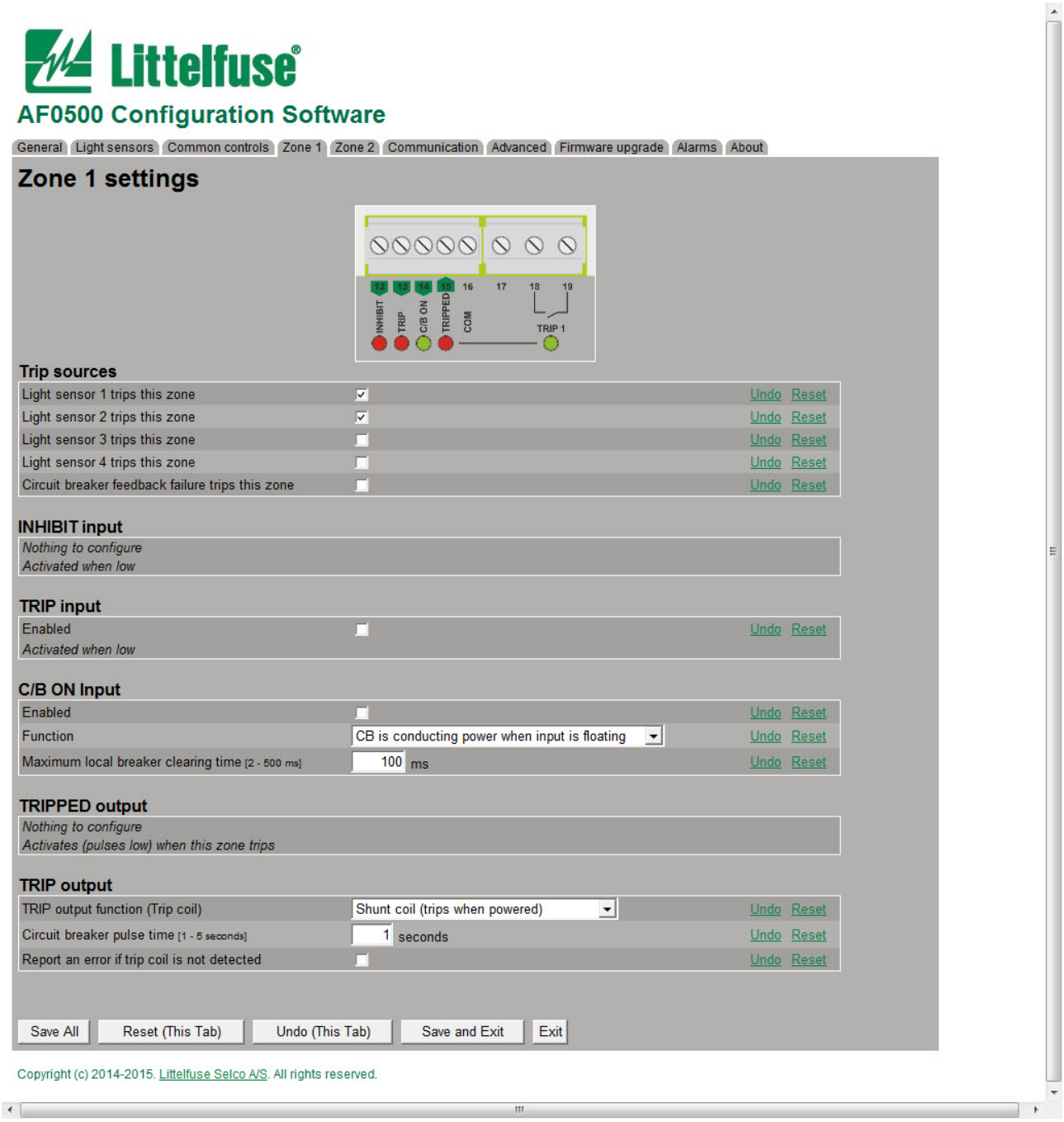
Littelfuse
AF0500 Configuration Software
General
Light sensors
Common controls
Zone 1
Zone 2
Communication
Advanced
Firmware upgrade
Alarms
About
Zone 1 settings
12
13
14
15
16
17
18
19
INHIBIT
TRIP
C/B ON
TRIPPED
COM
TRIP 1
Trip sources
Light sensor 1 trips this zone
Light sensor 2 trips this zone
Light sensor 3 trips this zone
Light sensor 4 trips this zone
Circuit breaker feedback failure trips this zone
Undo
Reset
INHIBIT input
Nothing to configure
Activated when low
TRIP input
Enabled
Activated when low
C/B ON Input
Enabled
Function
CB is conducting power when input is floating
Maximum local breaker clearing time [2 - 500 ms]
100
ms
TRIPPED output
Nothing to configure
Activates (pulses low) when this zone trips
TRIP output
TRIP output function (Trip coil)
Shunt coil (trips when powered)
Circuit breaker pulse time [1 - 5 seconds]
1
seconds
Report an error if trip coil is not detected
Save All
Reset (This Tab)
Undo (This Tab)
Save and Exit
Exit
Copyright (c) 2014-2015. Littelfuse Selco A/S. All rights reserved.

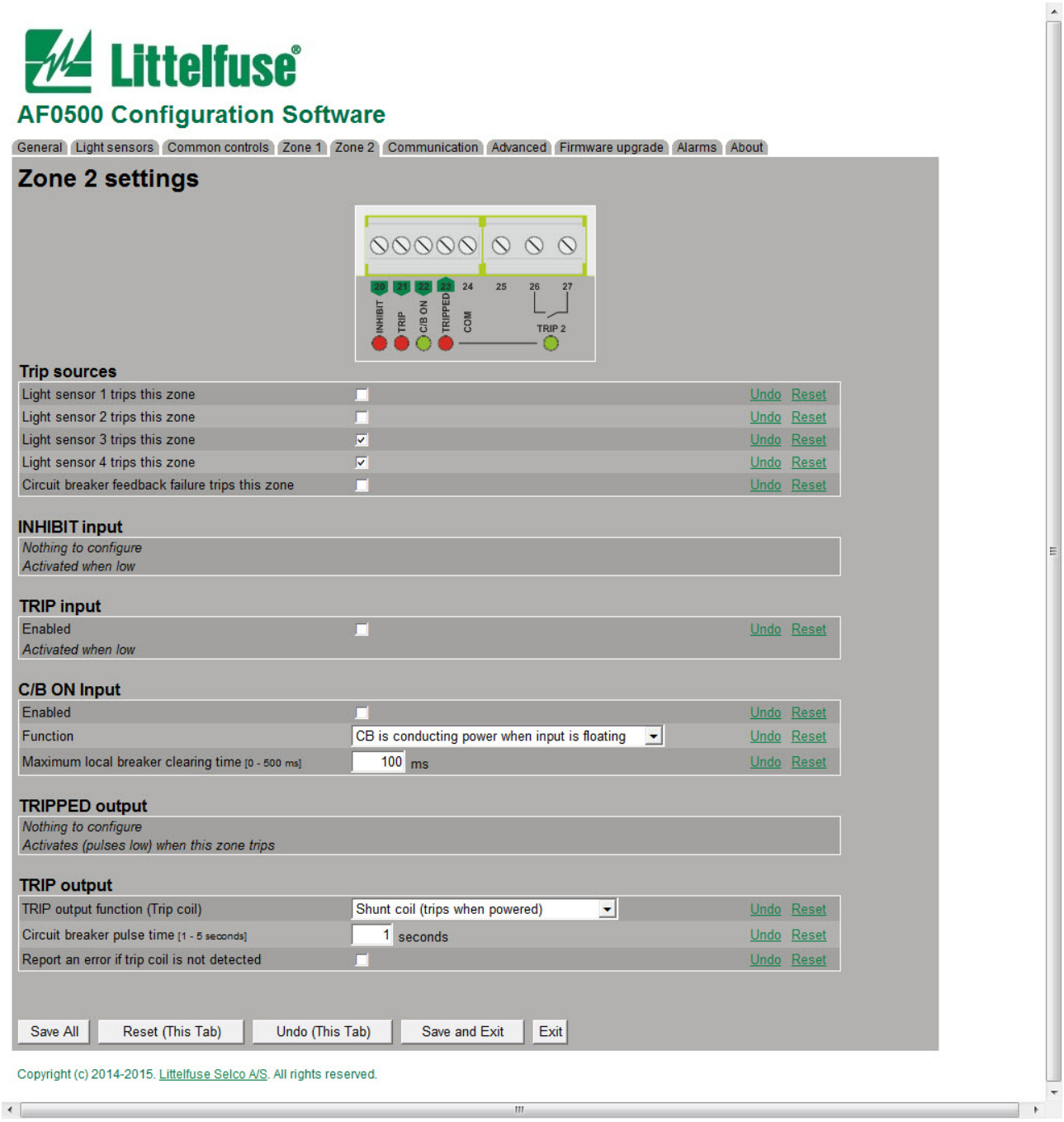
Littelfuse
AF0500 Configuration Software
General
Light sensors
Common controls
Zone 1
Zone 2
Communication
Advanced
Firmware upgrade
Alarms
About
Zone 2 settings
20
21
22
23
24
25
26
27
INHIBIT
TRIP
C/B ON
TRIPPED
COM
TRIP 2
Trip sources
Light sensor 1 trips this zone
Light sensor 2 trips this zone
Light sensor 3 trips this zone
Light sensor 4 trips this zone
Circuit breaker feedback failure trips this zone
Undo
Reset
INHIBIT input
Nothing to configure
Activated when low
TRIP input
Enabled
Activated when low
C/B ON Input
Enabled
Function
CB is conducting power when input is floating
Maximum local breaker clearing time [0 - 500 ms]
100
ms
TRIPPED output
Nothing to configure
Activates (pulses low) when this zone trips
TRIP output
TRIP output function (Trip coil)
Shunt coil (trips when powered)
Circuit breaker pulse time [1 - 5 seconds]
1
seconds
Report an error if trip coil is not detected
Save All
Reset (This Tab)
Undo (This Tab)
Save and Exit
Exit
Copyright (c) 2014-2015. Littelfuse Selco A/S. All rights reserved.

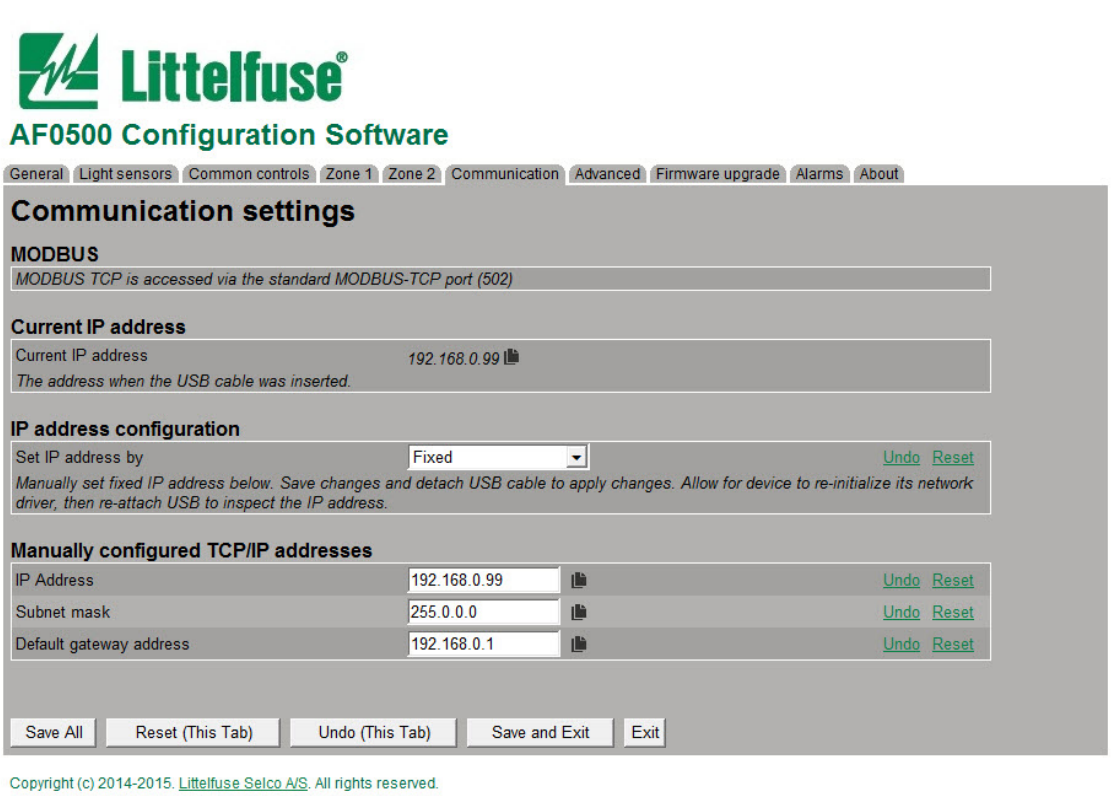
Littelfuse
AF0500 Configuration Software
General
Light sensors
Common controls
Zone 1
Zone 2
Communication
Advanced
Firmware upgrade
Alarms
About
Communication settings
MODBUS
MODBUS TCP is accessed via the standard MODBUS-TCP port (502)
Current IP address
Current IP address
192.168.0.99
The address when the USB cable was inserted.
IP address configuration
Set IP address by
Fixed
Undo
Reset
Manually set fixed IP address below. Save changes and detach USB cable to apply changes. Allow for device to re-initialize its network driver, then re-attach USB to inspect the IP address.
Manually configured TCP/IP addresses
IP Address
192.168.0.99
Subnet mask
255.0.0.0
Default gateway address
192.168.0.1
Save All
Reset (This Tab)
Undo (This Tab)
Save and Exit
Exit
Copyright (c) 2014-2015. Littelfuse Selco A/S. All rights reserved.

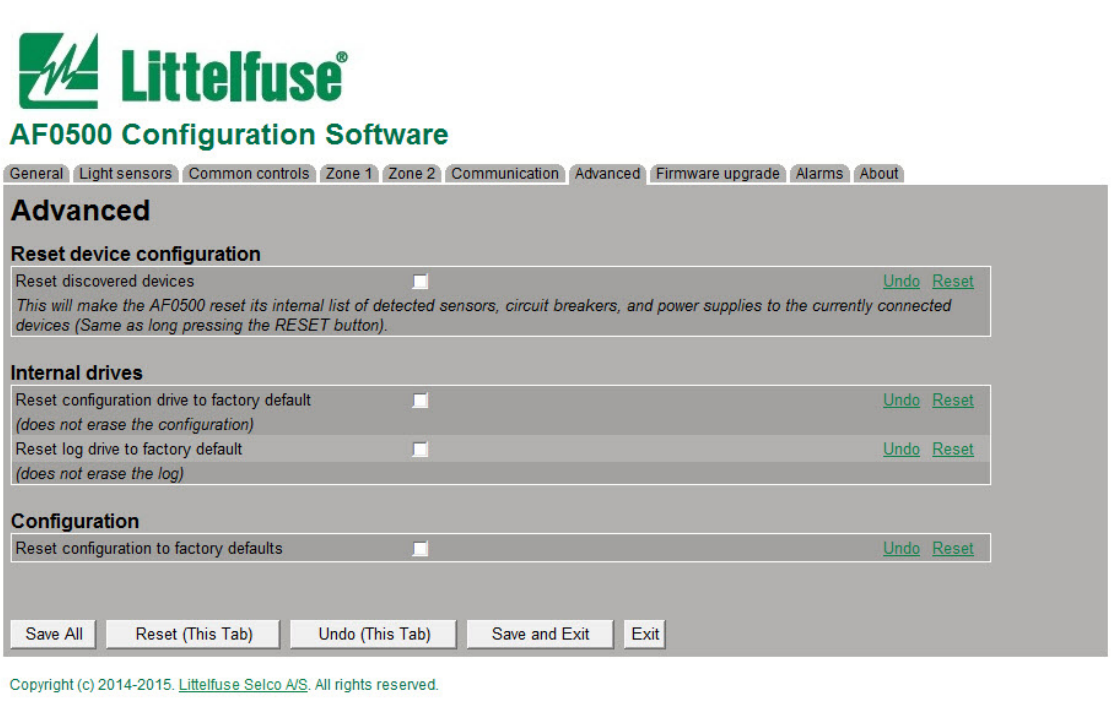
Littelfuse
AF0500 Configuration Software
General
Light sensors
Common controls
Zone 1
Zone 2
Communication
Advanced
Firmware upgrade
Alarms
About
Advanced
Reset device configuration
Reset discovered devices
Undo
Reset
This will make the AF0500 reset its internal list of detected sensors, circuit breakers, and power supplies to the currently connected devices (Same as long pressing the RESET button).
Internal drives
Reset configuration drive to factory default
(does not erase the configuration)
Reset log drive to factory default
(does not erase the log)
Configuration
Reset configuration to factory defaults
Save All
Reset (This Tab)
Undo (This Tab)
Save and Exit
Exit
Copyright (c) 2014-2015. Littelfuse Selco A/S. All rights reserved.

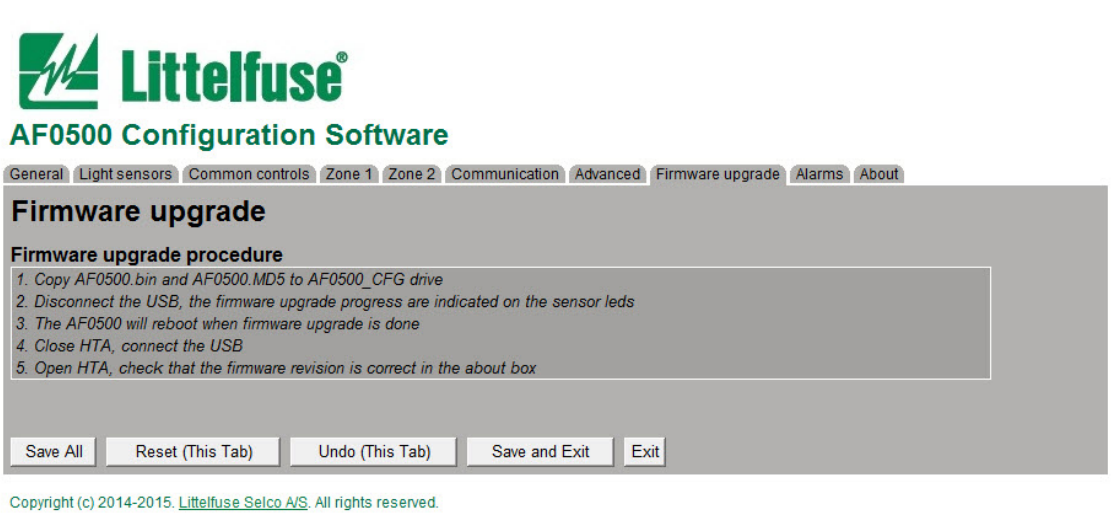

The USB configuration software also shows the cause of any standing alarms in clear text.

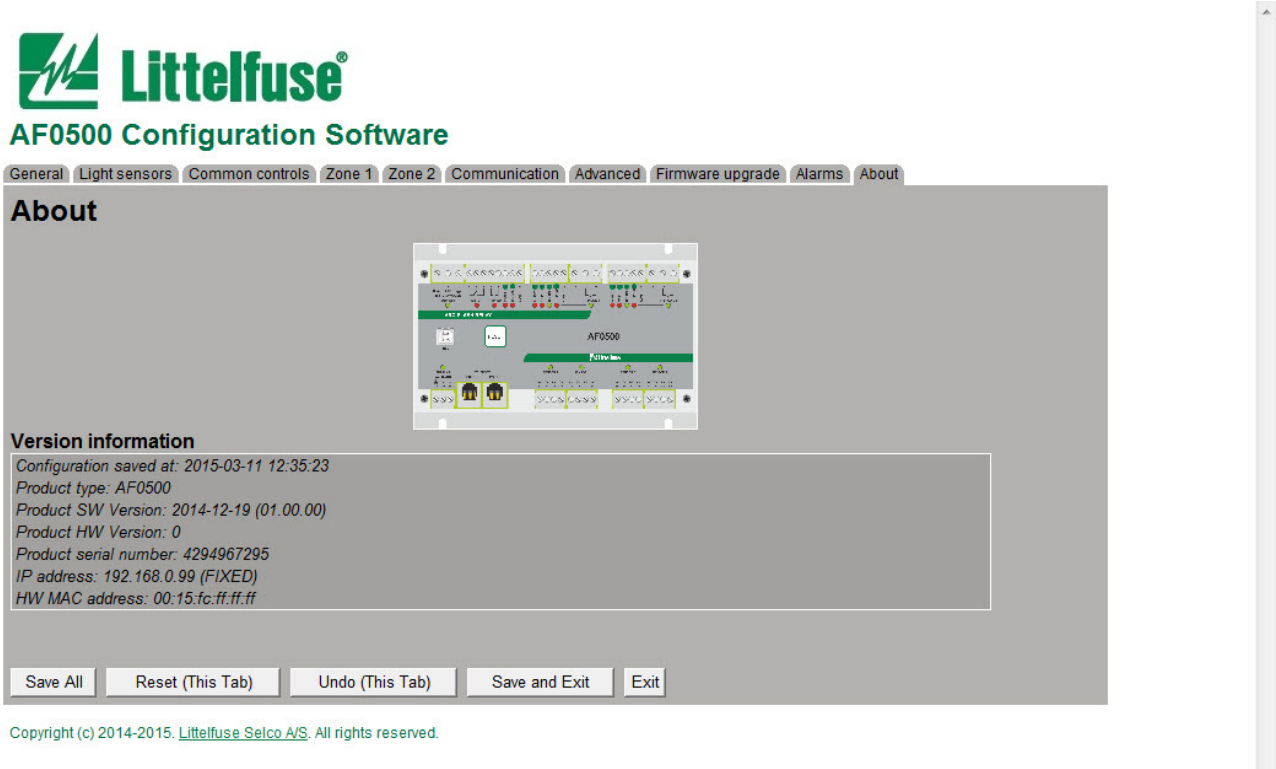

7.4 USB Event Log

To access the event log, plug in a USB connector and connect to a computer. After a few seconds, two new drives appear:

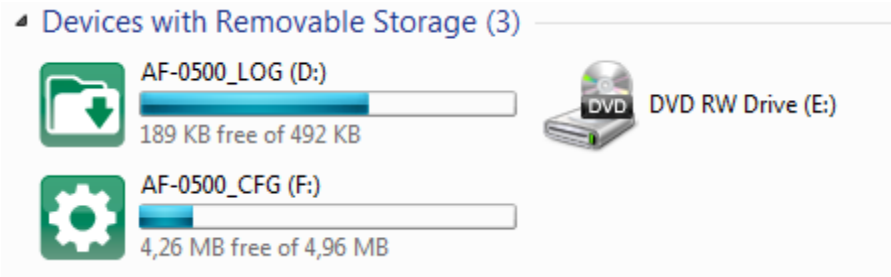

The log is saved on the AF0500_LOG drive, and is a text file called AF0500.LOG.

A tool called log_view.hta allows simple filtering of the log, e.g. to show log lines with relation to events only.

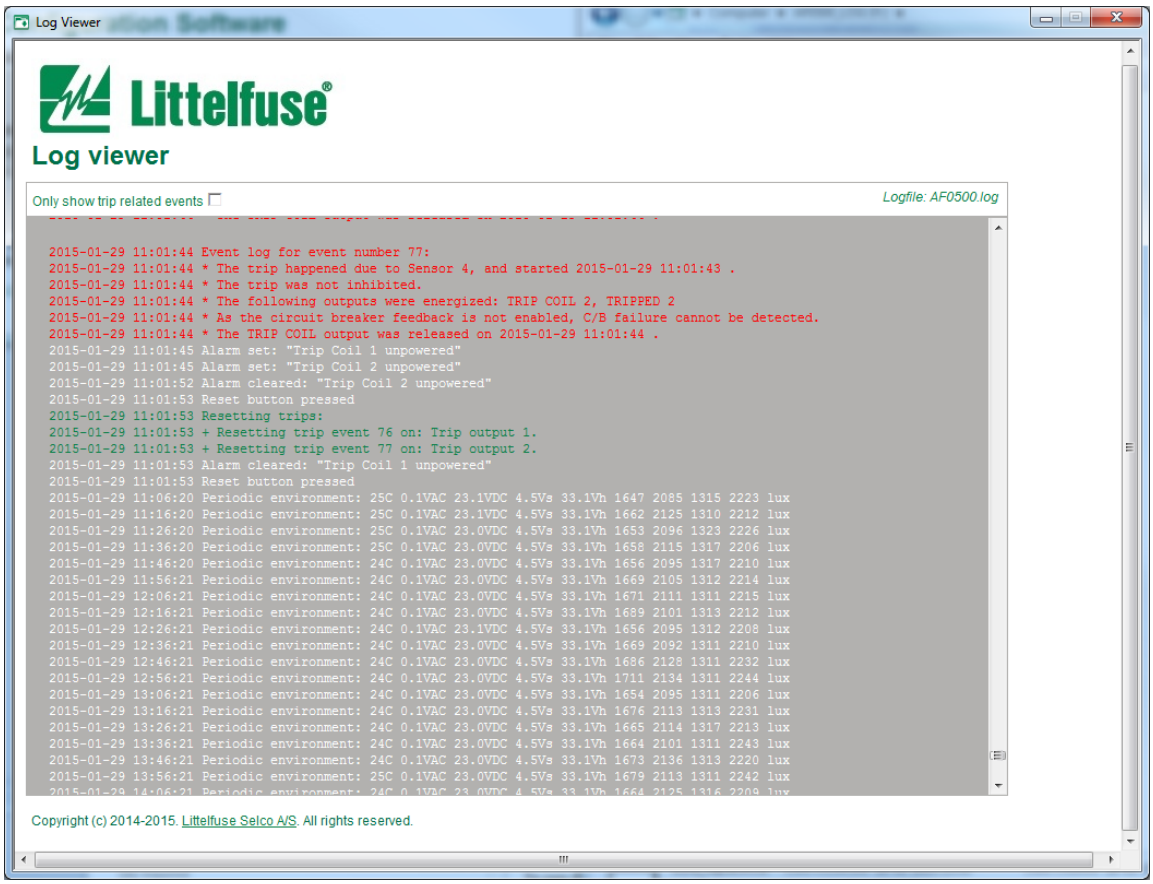

7.5 Firmware Upgrade

NOTE: The AF0500 will restart during the firmware upgrade process. Ensure the equipment is in a safe state prior to starting the upgrade process. Do not interrupt the firmware upgrade process.

Product information, including hardware and firmware details, can be reviewed in the About tab as shown in Section 7.3.1.
Follow the procedure below to perform a firmware upgrade:

1. Contact Littelfuse at relays@littelfuse.com to obtain the newest firmware file.
2. Connect the AF0500 to a computer using a USB cable. See Section 7.3.
3. Copy the AF0500.bin and AF0500.md5 files to the AF0500 Configuration drive.
4. Disconnect the USB cable. The firmware upgrade will begin. Progress will be shown on the front panel as progressively-lit green sensor LED's, starting from Sensor 1 to Sensor 4. The firmware upgrade can take up to 150 seconds.
5. The AF0500 will restart when the firmware upgrade has been completed.
6. Close the Configuration Software screen (HTA file).
7. Reconnect the AF0500 to the computer as in Step 2.
8. Confirm that the firmware revision shown in the About tab is correct.

8 COMMISSIONING

With no manual configuration, a freshly unpacked and wired AF0500 will work using the factory default settings. It will trip the TRIP 1 output if any sensors connected to input 1 or 2 exceed the default setting of 10 klux, even if a circuit check is reporting a cable to be broken. Likewise, the TRIP 2 output will trip if any sensor connected to input 3 or 4 gives an alarm.

The digital I/O will operate, and if wired to perform upstream circuit breaker tripping or zone merging, it will work as programmed in the wiring. It is possible to configure these connections in software as well, if so desired. If both wired and software connections are set up, both will be active, and the system will perform a logical “OR” between them: if any input, hardware or software, tells a zone to trip, it will do so.

The INHIBIT input is always active, and will always inhibit a trip from propagating to the TRIPPED as well as to the TRIP COIL outputs if the input is active.

Littelfuse recommends always doing a full systems test on all sensors and outputs to ensure that any errors in the cabling or configuration will be detected and can be corrected before the system is put into normal operation.

CAUTION: Make sure that the area is safe before this test. Ensure that loads and power are disconnected at the transformers, etc.

8.1 Configuration of Installed Sensors

The AF0500 will auto-detect sensors as they are connected. To reset any errors (shown as blinking red LED in a position where no sensor is attached), e.g. after moving a sensor to another position on the unit, press and hold the RESET button for three seconds. This will redetect which sensors, power supplies, etc. are connected.

8.2 Testing the Sensors

To test the tripping of point sensors, the intensity of light at the sensors needs to rise above 10 klux (or the defined light immunity setting, if changed). The LED flash on most phones are not sufficient, nor are most LED flashlights. Most incandescent flashlights (e.g. Mini Maglite with Xenon bulb or larger) can be used, if the beam can be focused to a very small circle and the flashlight is brought right next to the sensor. A normal AC light bulb can also be used.

For fiber sensors, the light intensity needs to be above 10 klux on a much larger area, which is not possible with a flashlight or standard light bulbs. To test fiber sensors, a 300-500 W halogen lamp or a powerful photo flash with a guide number of at least 15 m (50 ft) is needed. See Section 10.7.

1. Unplug the TRIP outputs to avoid tripping the circuit breakers. If the AF0500 TRIPPED outputs are connected to other units, unplug these connectors as well.
2. Confirm that there is a solid green LED for each connected optical sensor. This confirms that sensors are connected and healthy.
3. Confirm that a short red flashing light occurs periodically in each sensor. This indicates that the sensor circuit is being checked.
4. Point the light source at a sensor and check that the LED on the sensor and the front panel of the AF0500 turns red continuously. The TRIPPED LED will also turn on. If this does not happen, the light source may not be powerful enough, especially for fiber sensors.
5. Repeat for the remaining sensors.
6. Check that the indicator LED’s on the front panel of the unit have turned red for all connected sensors.

© 2017 Littelfuse

7. Press the RESET button to clear the trip indication.
8. Replace any connectors removed to re-establish protection.

8.3 Testing the Trip Coil Outputs and Associated Circuit Breakers

To ensure the system is ready to test, the system should only have supply power. The TRIP COIL output will be tripped during this procedure. Also be aware that other units connected to the TRIPPED output will also trip, unless the connection is broken for the test.

1. Confirm that there is a solid green light in the TRIP COIL output LED. This means that the trip coil is detected and ready to trip.
2. Connect the TRIP input for the zone to COM using a piece of wire, terminals 13 to 16 for zone 1, terminals 21 to 24 for zone 2.
3. Observe that the connected trip coil operates. The output will reset itself after the configured pulse time, one second by default.
4. Press the RESET button to reset the trip indication. Reset the tripping device if necessary.
5. Replace any connectors removed to re-establish protection.
6. Repeat for each TRIP COIL output.

8.4 Full Operation Test

To ensure the system is ready to test, the system should only have supply power. The TRIP outputs on all connected units will be tripped during this procedure.

1. Use the system diagram to find out which circuit breakers should trip for each sensor. Generally, the system should be set up so that a light on a sensor removes power from any conductor that the sensor can see.
2. Make a table with a line for each sensor, and mark which circuit breakers should trip in order to remove power completely from the area. See Table 2.
3. Confirm that there is a solid green LED for each connected optical sensor. This confirms that sensors are connected and healthy.
4. Confirm that a short red flashing light occurs periodically in each sensor. This indicates that the sensor circuit is being checked.
5. Move a light source towards the sensor. Confirm that the TRIP output trips and that the LED's of the TRIP output and sensor change to red. Confirm that all circuit breakers which supply the area which the sensor can see have tripped. Note the result in the table.
6. Press RESET on all affected units, and reset the tripping device if necessary.
7. Repeat steps 3 to 6 for the remaining sensors.
8. If the system has upstream circuit breakers or tie circuit breakers, repeat steps 1 to 6, but with the local circuit breakers disabled by removing the TRIP COIL outputs to these circuit breakers. This means that the upstream circuit breakers should be the ones to trip for every sensor.

© 2017 Littelfuse

TABLE 2. SAMPLE TABLE FOR TESTING A SYSTEM.

SENSOR:	**SHOULD TRIP THESE CIRCUIT BREAKERS:**	**OBSERVED TRIPS:**
Unit 1, sensor 1 Placed on Left Busbar	Left Incoming and Tie Circuit Breaker	
Unit 1, sensor 4 Placed in Tie Circuit Breaker Cabinet	Left and Right Incoming	
Unit 2, sensor 3 Placed at Output 1	Local: Feeder 1 Upstream if Feeder 1 Fails to Trip: Left Incoming and Tie Circuit Breaker	
Etc.		

© 2017 Littelfuse

9 SUPPORT RESOURCES

The most up-to-date manuals, data sheets, instruction videos, etc. can be found on the AF0500 site at www.littelfuse.com/AF0500.

The AF0500 is supported through the Littelfuse network of technical sales and distributors. For installation help and support, please contact your sales representative. Include detailed information about the installation and application. See Section 2.

9.1 Sending Information For Support

A picture or video of the installation makes it much easier to provide assistance. Also, the configuration and log files can be very helpful, as is the serial number of the unit.

Attaching the files to the support email can be done like this:

Plug in a USB connector and connect to a computer.

After a few seconds, two new drives appear:

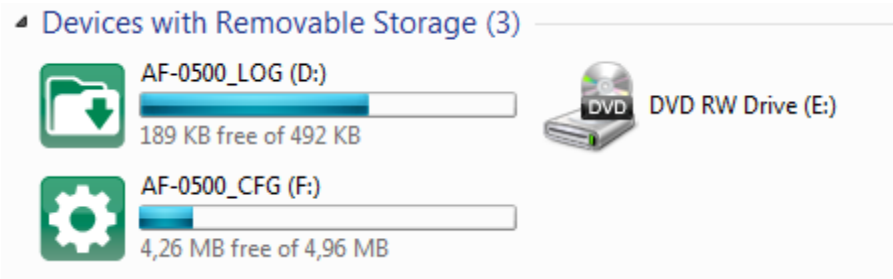

From the LOG drive, select and attach the AF0500.LOG file.

From the CFG drive, select and attach the CONFIG.CFG file.

Provide a single line diagram of the installation with indication of the zone boundaries if possible.

© 2017 Littelfuse

10 SPECIFICATIONS

10.1 AF0500

Supply:	
Universal:	20 VA, 100 to 240 Vac (+10%, -15%) 50/60 Hz, 8 W, 110 to 250 Vdc (+10%, -20%)
Low Voltage:	4 W, 24 to 48 Vdc (+10%, -20%)
Optical Settings:	
External Sensors:	4 Light sensors
Sensor Types:	PGA-LS10, PGA-LS20, and PGA-LS30, all with sensor check
Immunity Adjustment:	Trip above 10 to 25 klux
Intentional Trip Delay Settings:	0.5 to 200 ms 0.5 ms intentional delay results in a maximum 0.8 ms total delay
TRIP COIL Outputs:	
Type:	IGBT Switch
Configuration:	Normally Open (Form A) isolated contact
UL Rating:	120/240 Vac, 1800 VA, 0.75 A maximum continuous, 125/250 Vdc, 138 VA, 0.75 A maximum continuous
Supplemental Rating:	
Make/Carry 0.2 s:	30 A
Voltage Rating:	24 to 300 Vac, 24 to 300 Vdc
Current Rating:	20 A for 2 s, 10 A for 5 s
Control Voltage Alarm:	<15 V
Control Voltage Test type:	Measurement of current through a 100 k parallel resistor
Operating Mode:	Shunt trip or undervoltage trip coil, configurable
Protection:	320 Vac MOV, thermally protected
Isolation:	1,000 Vac
Pulse Duration:	1 to 5 s, configurable
On-State Voltage Drop:	2.5 V at 5 A, 25˚C (77˚F) 4.0 V at 10 A, 25˚C (77˚F)
Output Relays:	
ERROR Relay:	
Contact Configuration:	Change-over (Form C) isolated contact Normally energized
UL Rating:	5 A resistive, 150 Vac 5 A resistive, 30 Vdc 0.3 A resistive, 50 Vdc

© 2017 Littelfuse

Supplemental Contact Rating:	
Make/Carry 0.2 s:	30 A
Rating Code:	B300, R300
Break:	
dc:	28 W Resistive
ac:	1500 VA (PF=1.0)
	360 VA (PF=0.4)
	Subject to maximums of 5 A and 150 V (ac or dc)
Tripped Status Relay:	
Contact Configuration:	Normally Open (Form A) isolated contact
UL Rating:	100 mA, 50 Vac/Vdc
Supplemental Rating:	
Contact Rating:	3 A Resistive, 50 Vac 3 A Resistive, 30 Vdc
Terminals:	Wire Clamping, 22-12 AWG (0.14 to 2.5 mm^2) copper conductors
Torque:	4 to 5.5 lbf·in (0.45 to 0.62 N·m)
Local Interface:	USB 2.0 Full speed Mass storage device
Communications Interface:	
Ethernet ports	2 ports, with an internal Ethernet switch
Configuration:	10/100 Mbps, Base TX, Isolated
Protocol:	Modbus® TCP
Internal Real-Time Clock:	
Battery:	CR1632[1]
Life:	Minimum 10 years
Dimensions:	
Height:	130 mm (5.1 in)
Width:	200 mm (7.9 in)
Depth:	54 mm (2.1 in)
Shipping Weight:	0.9 kg (2 lb)
Mounting:	35 mm DIN rail or surface mount
Environment:	
Operating Temperature:	-40 to 70°C (-40°F to 158°F)
Storage Temperature:	-40 to 70˚C (-40°F to 158°F)
Humidity:	93% Non-condensing

© 2017 Littelfuse

Altitude:

Below 2,000 m (6,500 ft):	Normal Operation
Above 2,000 m (6,500 ft):	24 Vdc supply only, shunt trip only
Above 4,000 m (13,000 ft):	Contact Littelfuse for further information.

10.2 EMC Tests

Verification tested in accordance with IEC/EN60255-26:2013.

1 MHz Burst:	IEC 60255-22-1 ± 1 kV differential mode (line-to-line) ± 2.5 kV common mode
Electrostatic Discharge:	IEC 60255-22-2 ± 6 kV Contact Discharge (direct and indirect) ± 8 kV Air Discharge
Radiated RF Immunity:	IEC 60255-22-3 10 V/m, 80-1,000 MHz, 80% AM (1 kHz) 10 V/m, 1.4 to 2.7 GHz, 80% AM (1 kHz)
Fast Transient:	IEC 60255-22-4: Class A: ± 4 kV (on AC mains)
	ANSI/IEEE C37.90.1-2002 (Oscillatory and fast transients on input terminals)
Surge Immunity:	IEC 60255-22-5: ± 4 kV differential mode (on AC lines) ± 2 kV common mode (on AC lines) ± 2 kV differential mode (on DC lines) ± 1 kV common mode (on DC lines) ± 2 kV common mode (on I/O ports) ± 1 kV differential mode (on I/O ports)
Conducted RF Immunity:	IEC 60255-22-6 10 Vrms, 0.15-80 MHz, 80% AM (1 kHz)
Power Frequency:	IEC 60255-22-7
Magnetic Field Immunity:	IEC 61000-4-8 30 A/m and 300 A/m, 50 Hz and 60 Hz
Current Harmonics and Voltage Fluctuations:	IEC 61000-3-2 and IEC 61000-3-3 Class A
Radiated and Conducted Emissions:	CISPR 22:2008-09 / EN55022:2010 Class A
Voltage Interruptions:	IEC 60255-11 and IEC 60255-29 100% Interrupts 3 x for 5 ms, 10 ms, 20 ms, 50 ms, 100 ms, 200 ms

© 2017 Littelfuse

10.3 Environmental Tests

Cold:	IEC 60068-2-1:2007
Temperature:	-40°C
Duration:	16 hours
Dry Heat:	IEC 60068-2-2:2007
Temperature:	70°C
Duration:	16 hours
Humidity:	50% RH
Damp Heat Cyclic:	IEC 60068-2-30:2005
Lower Temperature:	25°C
Humidity Range:	95 – 100 % RH
Upper Temperature:	55°C
Humidity Range:	90 – 96 % RH
Number of Cycles:	2
Vibration – Resonance Search:	IEC 60068-2-6:2007
Frequency Range:	2 - 100 Hz
Frequency / Amplitude:	
2 - 13.2 Hz:	± 1 mm
13.2 – 100 Hz:	± 0.7 g
Sweep Rate:	Max. 1 octave/min.
Number of Axes:	3 mutually perpendicular
Vibration – Endurance Sinusoidal:	IEC 60068-2-6:2007
Frequency Range:	2 - 100 Hz
Frequency / Amplitude:	
2 - 13.2 Hz:	± 1 mm
13.2 - 100 Hz:	± 0.7 g
Procedure:	Dwell on found resonances
Dwell conditions:	Q ≥ 2 : 90 minutes at each resonance frequency
Q < 2:	90 minutes 30 Hz
Number of Axes:	3 mutually perpendicular
Vibration – Shock, Seismic:	IEC 60255-21-1

10.4 Safety

Safety:	IEC 61010-1: 2010 3rd Edition +AMD 1:2016 Safety Requirements for Electrical Equipment for Measurement, Control, and Laboratory Use – Part I
	UL508 Industrial Control Equipment

© 2017 Littelfuse

10.5 Certification

Certification:	CSA C US LR 62897 UL Listed c UL us LISTED IND.CONT.EQ 4YY5 NRGU.E348169 UL508 Industrial Control Equipment[2] Australia CE, European Union EMC directive 2014/30/EU: Certified after IEC/EN 60255-26:2013 Low voltage directive 2014/35/EU: Certified after IEC/EN 61010-1:2010 + AMD 1:2016 FCC
Surge Withstand:	ANSI/IEEE C37.90.1-2002 (Oscillatory and Fast Transient)

© *2017* Littelfuse

10.6 Sensors

	PGA-LS10	**PGA-LS20 and PGA-LS30**
Type:	Point sensor	Fiber-optic sensor
Detection Zone:	180 x 360° (half sphere)	360° along fiber
Output:	0-35 mA	0-35 mA
Electrical Cable:	Shielded 3-wire 20 AWG (0.5 mm^2) electrical cable	Shielded 3-wire 20 AWG (0.5 mm^2) electrical cable
Factory Cable Length:	10 m (33 ft) electrical cable	**PGA-LS20:** 8 m (26 ft) active;10 m (33 ft) total (2 m (7 ft) shielded), 2 x 10 m electrical cable **PGA-LS30:** 18 m (59 ft) active; 20 m (66 ft) total (2 m (7 ft) shielded), 2 x 10 m (33 ft) electrical cable
Max. Elec. Cable Length:	50 m (164 ft)	50 m (164 ft)
Sensor Check:	Built-in LED for visual feedback	Built-in LED for visual feedback
Dimensions:	32 x 52 x 24 mm (1.3 x 2.0 x 0.9 in)	Transmitter and Receiver: 32 x 56 x 19 mm (1.3 x 2.2 x 0.7 in)
Enclosure:	IP 30	IP 30

© *2017* Littelfuse

10.7 Ordering Information

AF0500-00-□□

Options:
Blank - No Conformal Coating
CC - Conformal Coating

Accessories:

PGA-LS10 Point Sensor

PGA-LS20 Fiber-Optic Sensor, 8 m (26 ft) active length

PGA-LS30 Fiber-Optic Sensor, 18 m (59 ft) active length

PGA-0031 DIN-rail mounting brackets

PGA-1100 Diode Logic Unit

PGA-FLSH-00 Photo Flash for commissioning testing

PGA-FLSH-01 Photo Flash, CE and RoHS

10.8 Related Products

PGR-8800 Stand-alone Arc-Flash Relay with 6 sensor inputs, 1 trip coil output, with CT inputs for current inhibit

10.9 Warranty

The AF0500 Arc-Flash Relay is warranted to be free from defects in material and workmanship for a period of five years from the date of purchase.

Littelfuse will (at Littelfuse's option) repair, replace, or refund the original purchase price of a AF0500 that is determined by Littelfuse to be defective if it is returned to the factory, freight prepaid, within the warranty period. This warranty does not apply to repairs required as a result of misuse, negligence, an accident, improper installation, tampering, or insufficient care. Littelfuse does not warrant products repaired or modified by non-Littelfuse personnel.

NOTES:

[1] Battery is mounted in an internal socket and should be changed by qualified service personnel only. Contact your distributor for more information.

[2] The AF0500 Arc Flash Relay is currently listed as a protective relay (UL category NRGU) and complies with the UL508 Industrial Control Equipment standard. UL did not evaluate the functionality of the arc fault protection afforded by this product. A file review will occur when the requirements for investigation of arc detection and mitigation systems are developed and additional tests will be performed if required.

[3] AF0500 uses the open source component FreeMODBUS internally. For license, version, and source-code information please contact opensource@littelfuse.com.

© *2017* Littelfuse

APPENDIX A MODBUS TCP REGISTER MAP

ADDRESS (BASE 1, PLC MODE)		PARAMETER TYPE	ACCESS[R/W]	DESCRIPTION	TERMINAL	VALUES
DEC	HEX					
Analog Inputs, Engineering Units (200 - 204)						
200	C8h					
200	C8h	Word	R	Number of light sensors on system.	na	4
201	C9h	Word	R	Light on “Sensor 1”	31-34	Value on analog input - raw engineering units (0-4056, about 9 lux/unit).
202	CAh	Word	R	Light on “Sensor 2”	35-38	Value on analog input - raw engineering units (0-4056, about 9 lux/unit).
203	CBh	Word	R	Light on “Sensor 3”	39-42	Value on analog input - raw engineering units (0-4056, about 9 lux/unit).
204	CCh	Word	R	Light on “Sensor 4”	43-46	Value on analog input - raw engineering units (0-4056, about 9 lux/unit).
Analog Inputs, Engineering Units (Max Value Since Last MODBUS Read) (300 - 304)						
300	12Ch					
300	12Ch	Word	R	Number of light sensors on system.	na	4
301	12Dh	Word	R	Light on “Sensor 1 Max”	31-34	Max value seen on analog input since last MODBUS read - raw engineering units (0-4056, about 9 lux/unit).
302	12Eh	Word	R	Light on “Sensor 2 Max”	35-38	Max value seen on analog input since last MODBUS read - raw engineering units (0-4056, about 9 lux/unit).
303	12Fh	Word	R	Light on “Sensor 3 Max”	39-42	Max value seen on analog input since last MODBUS read - raw engineering units (0-4056, about 9 lux/unit).
304	130h	Word	R	Light on “Sensor 4 Max”	43-46	Max value seen on analog input since last MODBUS read - raw engineering units (0-4056, about 9 lux/unit).
Analog Inputs, Engineering Units (Min Value Since Last MODBUS Read) (400 - 404)						
400	190h					
400	190h	Word	R	Number of light sensors on system.	na	4
401	191h	Word	R	Light on “Sensor 1 Min”	31-34	Min value seen on analog input since last MODBUS read - raw engineering units (0-4056, about 9 lux/unit).
402	192h	Word	R	Light on “Sensor 2 Min”	35-38	Min value seen on analog input since last MODBUS read - raw engineering units (0-4056, about 9 lux/unit).
403	193h	Word	R	Light on “Sensor 3 Min”	39-42	Min value seen on analog input since last MODBUS read - raw engineering units (0-4056, about 9 lux/unit).
404	194h	Word	R	Light on “Sensor 4 Min”	43-46	Min value seen on analog input since last MODBUS read - raw engineering units (0-4056, about 9 lux/unit).

© 2017 Littelfuse

ADDRESS (BASE 1, PLC MODE)		PARAMETER TYPE	ACCESS[R/W]	DESCRIPTION	TERMINAL	VALUES
DEC	HEX					
Sensor Input Status (500 - 504)						
500	1F4h					
500	1F4h	Word	R	Number of light sensors on system.	na	4
501	1F5h	Word	R	Status of “Sensor 1”	31-34	Bit 0=Not Detected, Bit 1=Detected, Bit2=Tripped, Bit3= Error (Lost - Has been detected, but is no longer there.)
502	1F6h	Word	R	Status of “Sensor 2”	35-38	Bit0=Not Detected, Bit1=Detected, Bit2=Tripped, Bit 3= Error (Lost - Has been detected, but is no longer there.)
503	1F7h	Word	R	Status of “Sensor 3”	39-42	Bit 0=Not Detected, Bit1=Detected, Bit2=Tripped, Bit3= Error (Lost - Has been detected, but is no longer there.)
504	1F8h	Word	R	Status of “Sensor 4”	43-46	Bit0=Not Detected, Bit1=Detected, Bit2=Tripped, Bit3= Error (Lost - Has been detected, but is no longer there.)
System Status (1100 - 1104)						
1100	44Ch					
1100	44Ch	Word	R	Number of user-reading status.	na	4
1101	44Dh	Word	R	Supply 1 Present	1-3	Reading: 0=Inactive; 1=Active;
1102	44Eh	Word	R	Supply 2 Present	28-30	Reading: 0=Inactive; 1=Active;
1103	44Fh	Word	R	DC Supply Voltage	28-30	DC Supply Voltage (In Integer Volts)
1104	450h	Word	R	Error	na	Reading: 0=No errors; 1=Error - Refer To Error Flags Bitmap
Digital Inputs (1200 - 1207)						
1200	4B0h					Inputs with (optional) cable monitoring
1200	4B0h	word	R	Number of Inputs	na	7
1201	4B1h	word	R	Status of Input “RESET”	9-11	Reading: 0=Inactive; 1=Active;
1202	4B2h	word	R	Status of Input “INHIBIT 1”	12-16	Reading: 0=Inactive; 1=Active;
1203	4B3h	word	R	Status of Input “TRIP 1”	13-16	Reading: 0=Inactive; 1=Active;
1204	4B4h	word	R	Status of Input “C/B ON 1”	14-16	Reading: 0=Inactive; 1=Active;
1205	4B5h	word	R	Status of Input “INHIBIT 2”	20-24	Reading: 0=Inactive; 1=Active;
1206	4B6h	word	R	Status of Input “TRIP 2”	21-24	Reading: 0=Inactive; 1=Active;
1207	4B7h	word	R	Status of Input “C/B ON 2”	22-24	Reading: 0=Inactive; 1=Active;

© 2017 Littelfuse

ADDRESS (BASE 1, PLC MODE)		PARAMETER TYPE	ACCESS[R/W]	DESCRIPTION	TERMINAL	VALUES
DEC	HEX					
Digital and Relay Outputs (1300 - 1307)						
1300	514h					Status of Physical Outputs
1300	514h	Word	R	Number of Outputs	NA	7
1301	515h	Word	R	Status on Relay “ERROR”	4-5-6	Reading: 0=Open; 1=Closed;
1302	516h	Word	R	Status on Relay “TRIPPED”	7-8	Reading: 0=Open; 1=Closed;
1303	517h	Word	R	Status of Output “C/B FAIL”	10-11	Reading: 0=Open; 1=Closed;
1304	518h	Word	R	Status of Output “TRIPPED 1”	15-16	Reading: 0=Open; 1=Closed;
1305	519h	Word	R	Status of “IGBT TRIP 1”	18-19	Reading: 0=Open; 1=Closed;
1306	51Ah	Word	R	Status of Output “TRIPPED 2”	23-24	Reading: 0=Open; 1=Closed;
1307	51Bh	Word	R	Status of “IGBT TRIP 2”	26-27	Reading: 0=Open; 1=Closed;
LED Status (1400 - 1426)						
1400	578h					Status of LED
1400	578h	Word	R	Number of LED`s	NA	26
1401	579h	Word	R	Supply 1	1-2	Bit 0=Off, Bit 1=On, Bit 2=Flashing
1402	57Ah	Word	R	Error	4-5-6	Bit 0=Off, Bit 1=On, Bit 2=Flashing
1403	57Bh	Word	R	Tripped	7-8	Bit 0=Off, Bit 1=On, Bit 2=Flashing
1404	57Ch	Word	R	Reset	9	Bit 0=Off, Bit 1=On, Bit 2=Flashing
1405	57Dh	Word	R	C/B Fault	10	Bit 0=Off, Bit 1=On, Bit 2=Flashing
1406	57Eh	Word	R	Inhibit 1	12	Bit 0=Off, Bit 1=On, Bit 2=Flashing
1407	57Fh	Word	R	Trip 1	13	Bit 0=Off, Bit 1=On, Bit 2=Flashing
1408	580h	Word	R	C/B On 1	14	Bit 0=Off, Bit 1=On, Bit 2=Flashing
1409	581h	Word	R	Tripped 1	15	Bit 0=Off, Bit 1=On, Bit 2=Flashing
1410	582h	Word	R	Trip 1 Red	18-19	Bit 0=Off, Bit 1=On, Bit 2=Flashing
1411	583h	Word	R	Trip 1 Green	18-19	Bit 0=Off, Bit 1=On, Bit 2=Flashing
1412	584h	Word	R	Inhibit 2	20	Bit 0=Off, Bit 1=On, Bit 2=Flashing
1413	585h	Word	R	Trip 2	21	Bit 0=Off, Bit 1=On, Bit 2=Flashing
1414	586h	Word	R	C/B On 2	22	Bit 0=Off, Bit 1=On, Bit 2=Flashing
1415	587h	Word	R	Tripped 2	23	Bit 0=Off, Bit 1=On, Bit 2=Flashing
1416	588h	Word	R	Trip 2 Red	26-27	Bit 0=Off, Bit 1=On, Bit 2=Flashing
1417	589h	Word	R	Trip 2 Green	26-27	Bit 0=Off, Bit 1=On, Bit 2=Flashing
1418	58Ah	Word	R	Supply 2	29-30	Bit 0=Off, Bit 1=On, Bit 2=Flashing
1419	58Bh	Word	R	Sensor 1 Red	31-34	Bit 0=Off, Bit 1=On, Bit 2=Flashing
1420	58Ch	Word	R	Sensor 1 Green	31-34	Bit 0=Off, Bit 1=On, Bit 2=Flashing
1421	58Dh	Word	R	Sensor 2 Red	35-38	Bit 0=Off, Bit 1=On, Bit 2=Flashing

© 2017 Littelfuse

ADDRESS (BASE 1, PLC MODE)		PARAMETER TYPE	ACCESS[R/W]	DESCRIPTION	TERMINAL	VALUES
DEC	HEX					
1422	58Eh	Word	R	Sensor 2 Green	35-38	Bit 0=Off, Bit 1=On, Bit 2=Flashing
1423	58Fh	Word	R	Sensor 3 Red	39-42	Bit 0=Off, Bit 1=On, Bit 2=Flashing
1424	590h	Word	R	Sensor 3 Green	39-42	Bit 0=Off, Bit 1=On, Bit 2=Flashing
1425	591h	Word	R	Sensor 4 Red	43-46	Bit 0=Off, Bit 1=On, Bit 2=Flashing
1426	592h	Word	R	Sensor 4 Green	43-46	Bit 0=Off, Bit 1=On, Bit 2=Flashing
Alarms (1500 - 1526)						
1500	5DCh					Internal flags from the last event - describes where a trip came from.
1500	5DCh	Word	R	Number of status flags available.	NA	26
1501	5DDh	Word	R	Sensor 1 Fault	31-34	Reading: 0=Inactive, 1=Active
1502	5DEh	Word	R	Sensor 2 Fault	35-38	Reading: 0=Inactive, 1=Active
1503	5DFh	Word	R	Sensor 3 Fault	39-42	Reading: 0=Inactive, 1=Active
1504	5E0h	Word	R	Sensor 4 Fault	43-46	Reading: 0=Inactive, 1=Active
1505	5E1h	Word	R	Supply 1 Off	1-3	Reading: 0=Inactive, 1=Active
1506	5E2h	Word	R	Supply 2 Off	28-30	Reading: 0=Inactive, 1=Active
1507	5E3h	Word	R	Supply 1 Out Of Spec	1-3	Reading: 0=Inactive, 1=Active
1508	5E4h	Word	R	Supply 2 Out Of Spec	28-30	Reading: 0=Inactive, 1=Active
1509	5E5h	Word	R	Internal I/O supply Error	NA	Reading: 0=Inactive, 1=Active
1510	5E6h	Word	R	Internal Sensor Supply Error	NA	Reading: 0=Inactive, 1=Active
1511	5E7h	Word	R	CB 1 Feedback Error	14	Reading: 0=Inactive, 1=Active
1512	5E8h	Word	R	CB 2 Feedback Error	22	Reading: 0=Inactive, 1=Active
1513	5E9h	Word	R	Trip Coil 1 Fault	18-19	Reading: 0=Inactive, 1=Active
1514	5Eah	Word	R	Trip Coil 2 Fault	26-27	Reading: 0=Inactive, 1=Active
1515	5EBh	Word	R	Trip Coil 1 Unpowered	18-19	Reading: 0=Inactive, 1=Active
1516	5ECh	Word	R	Trip Coil 2 Unpowered	26-27	Reading: 0=Inactive, 1=Active
1517	5EDh	Word	R	FW Unspecified Fault	NA	Reading: 0=Inactive, 1=Active
1518	5EEh	Word	R	FW Drive Not Ready	NA	Reading: 0=Inactive, 1=Active
1519	5EFh	Word	R	FW File Not Found	NA	Reading: 0=Inactive, 1=Active
1520	5F0h	Word	R	FW Image Wrong Product Name	NA	Reading: 0=Inactive, 1=Active
1521	5F1h	Word	R	FW Image No signature Found	NA	Reading: 0=Inactive, 1=Active
1522	5F2h	Word	R	FW Image Wrong Size	NA	Reading: 0=Inactive, 1=Active
1523	5F3h	Word	R	FW MD5 File Not Found	NA	Reading: 0=Inactive, 1=Active

© 2017 Littelfuse

ADDRESS (BASE 1, PLC MODE)		PARAMETER TYPE	ACCESS[R/W]	DESCRIPTION	TERMINAL	VALUES
DEC	HEX					
1524	5F4h	Word	R	FW Error MD5 Fault	NA	Reading: 0=Inactive, 1=Active
1525	5F5h	Word	R	Ethernet Peer To Peer Alarm	NA	Reading: 0=Inactive, 1=Active
1526	5F6h	Word	R	Trip Condition While Inhibited	NA	Reading: 0=Inactive, 1=Active

© 2017 Littelfuse

APPENDIX B INSTALLATION LOG SHEET

GENERAL INSTALLATION SETTINGS	MIN	DEFAULT	MAX	UNIT	COMMENTS
Date Installed					
Operator					
Comment 1					
Comment 2					
GENERAL					
System Name					
Description Of This Unit		AF0500 Arc-Flash Relay			
Date And Time					
Synchronize To PC Clock		Disabled			❑ Enabled ❑ Disabled
LIGHT SENSORS					
Common Settings					
Light Immunity Lower Limit	10	10	25	klux	_____ klux
Arc Detection Time Before Tripping	0 (Effective 0.8)	1	20,000	ms	_____ ms
Light Sensor 1					
Sensor Status					❑ Sensor Present ❑ No Sensor Detected ❑ Sensor Missing ❑ Sensor Tripped
Sensor Description		Sensor 1			_____
Change Configuration		No Change			❑ No Change ❑ No Sensor Expected ❑ Sensor Expected
Light Sensor 2					
Sensor Status					❑ Sensor Present ❑ No Sensor Detected ❑ Sensor Missing ❑ Sensor Tripped
Sensor Description		Sensor 2			_____
Change Configuration		No Change			❑ No Change ❑ No Sensor Expected ❑ Sensor Expected
Light Sensor 3					
Sensor Status					❑ Sensor Present ❑ No Sensor Detected ❑ Sensor Missing ❑ Sensor Tripped
Sensor Description		Sensor 3			_____
Change Configuration		No Change			❑ No Change ❑ No Sensor Expected ❑ Sensor Expected
Light Sensor 4					
Sensor Status					❑ Sensor Present ❑ No Sensor Detected ❑ Sensor Missing ❑ Sensor Tripped
Sensor Description		Sensor 4			_____
Change Configuration		No Change			❑ No Change ❑ No Sensor Expected ❑ Sensor Expected

© 2017 Littelfuse

GENERAL INSTALLATION SETTINGS	MIN	DEFAULT	MAX	UNIT	COMMENTS
COMMON CONTROL BLOCK					
Nothing To Configure					
ZONE 1					
Zone 1 / TRIP 1 Trips On		☑ Light Sensor 1 ☑ Light Sensor 2 ☐ Light Sensor 3 ☐ Light Sensor 4 ☐ CB Feedback Failure			☐ Light Sensor 1 ☐ Light Sensor 2 ☐ Light Sensor 3 ☐ Light Sensor 4 ☐ CB Feedback Failure
Trip Input					
Enabled		Enabled			❑ Enabled ❑ Disabled
CB ON Input					
Enabled		Enabled			❑ Enabled ❑ Disabled
Function		CB is conducting power when input is floating.			❑ CB is conducting power when input is pulled low. ❑ CB is conducting power when input is floating.
Trip Output					
Circuit Breaker Type		Shunt Coil (Trips When Powered)			❑ Shunt Coil (Trips When Powered) ❑ Undervoltage Coil (Closed While Powered)
Circuit Breaker Pulse Time	1	1	5	seconds	
Report An Error If Trip Coil Is Not Detected		Enabled			❑ Enabled ❑ Disabled
ZONE 2					
Zone 2 / TRIP 2 Trips On		☐ Light Sensor 1 ☐ Light Sensor 2 ☑ Light Sensor 3 ☑ Light Sensor 4 ☐ CB Feedback Failure			☐ Light Sensor 1 ☐ Light Sensor 2 ☐ Light Sensor 3 ☐ Light Sensor 4 ☐ CB Feedback Failure
Trip Input					
Enabled		Enabled			❑ Enabled ❑ Disabled
CB ON Input					
Enabled		Enabled			❑ Enabled ❑ Disabled
Function		CB is conducting power when input is floating.			☐ CB is conducting power when input is pulled low. ☐ CB is conducting power when input is floating.
Trip Output					
Circuit Breaker Type		Shunt Coil (Trips When Powered)			☐ Shunt Coil (Trips When Powered) ☐ Undervoltage Coil (Closed While Powered)
Circuit Breaker Pulse Time	1	1	5	seconds	
Report An Error If Trip Coil Is Not Detected		☑ Enabled			❑ Enabled ❑ Disabled
COMMUNICATION					
TCP IP Address		☑ Manual Fixed IP			☐ Manual Fixed IP ☐ Automatic (DHCP) ☐ Automatic (AUTO IP)
Manual IP Address		192.168.0.99			___.___.___.___
TCP/IP Subnet Mask		255.0.0.0			___.___.___.___
TCP/IP Default Gateway		192.168.0.1			___.___.___.___

© 2017 Littelfuse

GENERAL INSTALLATION SETTINGS	MIN	DEFAULT	MAX	UNIT	COMMENTS
ADVANCED					
Possibility To Reset Configuration And Drives – No Setup Parameters					
ALARMS					
Shows Currently Standing Alarms					

© 2017 Littelfuse

APPENDIX C REDUNDANT TRIP CIRCUIT DESCRIPTION

This section details what inputs and outputs are active when the redundant path is activated due to the CPU not running. An independent hardware watchdog stops blocking a hardware path from the trip detection circuits and directly to the outputs.

In this scenario the software is by definition not running, therefore the following functionality is inactive:

- Any programmed delays – everything is directly connected with no intentional delay
- Sensor presence check and health indication
- Any services on the network interface
- USB configuration and log access
- Inhibit functions
- C/B ON and C/B FAIL functions (therefore upstream circuit breaker function won't work)
- LED's will stay in the configuration they had when the software stopped running. Flashing will not work, so LED's which were flashing may be either fully on or off.

Tripping from light and inputs signals will work due to the redundant hardware, but with a simpler setup according to the table below. The ERROR relay will be in the correct state, indicating a unit error. Greyed out inputs and outputs are not read or driven.

Output Input	TRIP COIL 1 (NOTE 1)	TRIPPED Output 1	TRIP COIL 2 (NOTE 1)	TRIPPED Output 2	TRIPPED Relay	C/B FAIL Output	ERROR Relay
INHIBIT 1							X
TRIP 1	X	X					X
C/B FB 1							X
INHIBIT 2							X
TRIP 2			X	X			X
C/B FB 2							X
RESET							X
RESET Button							X
SENSOR 1	X	X	X	X			X
SENSOR 2	X	X	X	X			X
SENSOR 3	X	X	X	X			X
SENSOR 4	X	X	X	X			X

NOTE 1: When SW runs these outputs are pulsed – When controlled via redundant HW, they are held statically as long as the sensor reports light over the threshold, only protected by a thermal protection circuit (IGBT will disable when too hot).

NOTE 2: All light sensor inputs trip both TRIP COILS – normal zone setup is not respected.

© *2017* Littelfuse

APPENDIX D
AF0500 REVISION HISTORY

MANUAL RELEASE DATE	MANUAL REVISION	HARDWARE REVISION (REVISION NUMBER ON PRODUCT LABEL)	FIRMWARE REVISION
December 8, 2017	0-E-120817	1	1.00.01
April 8, 2016	0-D-040816		
September 16, 2015	0-C-091615		
June 1, 2015	0-B-060115		
March 2, 2015	0-A-030215	0	1.00.00

MANUAL REVISION HISTORY

Revision 0-E-120817

Section 5

Updated several application figures.

Section 10

Updated certification details.

Revision 0-D-040816

Section 4

Fig. 7 updated.

Section 7

Section 7.5 added.

Revision 0-C-091615

Section 4

Sensor installation and removal notes added.

Revision 0-B-060115

Section 4

Fig. 4 updated.

Section 5

Figs. 10, 11, 12, and 14 updated.
COM terminal note added to Section 5.4.
Coil note added to Section 5.6.

Section 6

Supply voltage updated in Section 6.1.2.

Section 7

Screen examples added.

Section 10

CSA certification added.
CE EMC standards updated.
Output relay specifications updated.

Appendix C

Table updated.

Revision 0-A-030215

Initial release.

© 2017 Littelfuse

HARDWARE REVISION HISTORY

Hardware Revision 1

Minor production changes.

Hardware Revision 0

Initial release.

FIRMWARE REVISION HISTORY

Firmware Revision 1.00.01

PCB ID updated.

Firmware Revision 1.00.00

Initial release.

© 2017 Littelfuse

This page intentionally left blank.

© 2017 Littelfuse