Littelfuse®

Expertise Applied | Answers Delivered

PROTECTION RELAYS & CONTROLS CATALOG

Encompass™ Product Partner

A ROCKWELL AUTOMATION PARTNER

Americas

Protection Relays & Controls

TABLE OF CONTENTS

ARC-FLASH MONITORING

AF0100 Series — Arc Flash Protection Relay 3
AF0500 Series — Arc Flash Protection Relay 4
PGR-8800 Series — Arc Flash Protection Relay 6

PUMP CONTROLS AND LIQUID LEVEL CONTROLS

PC105 Series — 5-channel Pump Controller 8
PC-102 Series — Seal-Leak & Over-Temperature Detector 9
460-15-100-LLS — Single-Channel Liquid Level Sensor 10
PC-XXX-LLC Series — Liquid Level Control Relay 11
201-100-SLD — Single-Channel Seal-Leak Detector 13

VOLTAGE MONITORING RELAYS

460 Series — 3-Phase Voltage Monitor 14

GROUND-FAULT PROTECTION

EL3100 Series — Ground-Fault & Phase-Voltage Indicator 16

CURRENT MONITORING RELAYS AND TRANSDUCERS

LSR-0 — Self-Powered Load Sensor / Proof Relay 17
LSRX / LSRX-C Series — Self-Powered Load Sensor / Proof Relay 18

NEUTRAL-GROUNDING-RESISTOR MONITORING

SE-330 Series — Neutral-Grounding-Resistor Monitor 20

INDUSTRIAL SHOCK-BLOCK

SB6000 Series — Industrial GFCI/EGFPD for Personnel Protection 22

© 2021 Littelfuse, Inc.

AF0100 SERIES
Arc-Flash Relay

Simplified Circuit Diagram

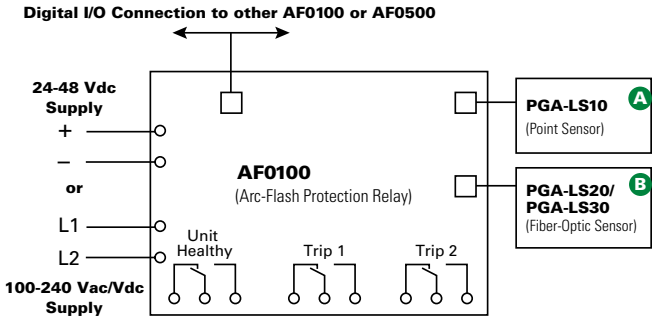

Ordering Information

ORDERING NUMBER	DESCRIPTION
AF0100-00	Arc-Flash Relay, Universal Supply
AF0100-10	Arc-Flash Relay, 24-48 V dc

Specifications

Input Voltage	
AF0100-00	100-240 V ac/V dc, 24-48 V dc
AF0100-10	24-48 V dc
Dimensions	**H** 90 mm (3.5”); **W** 128 mm (5.0”); **D** 60 mm (2.4”)
Trip, Error Relays	Form C, 250 V ac/30 V dc, 6 A resistive
Trip Time	5 ms (typical)
Sensitivity	10-25 klux programmable
Mounting	Surface, DIN rail
Operating Temperature	-40 °C to +70 °C (-40 °F to 158 °F)
Shipping Weight	1.0 kg (2.2 lb)
Certifications	UL Listed (UL 508), CE, RCM, FCC
Warranty	5 years

Description

The AF0100 Series arc-flash relay is a cost-effective solution that reduces arc-fault damage by detecting the light from an arc flash and rapidly tripping. Two remote light sensors can be connected to one relay and multiple AF0100 and/or AF0500 relays can be connected to monitor additional sensors, providing complete coverage for a wide range of applications. The compact, DIN-rail or surface-mountable body makes this an ideal solution for equipment manufacturers.

Two isolated Form-C contacts are provided for applications with multiple devices that must be tripped. This is especially useful for generator applications where the generator and breaker need to be tripped in case of an arc flash.

The AF0100 accepts PGA-LS10 point sensors and PGA-LS20/ PGA-LS30 fiber-optic sensors in any combination. Sensor health is continuously monitored to ensure fail-safe operation. A solid-state redundant trip circuit provides an internal fail-safe mechanism and fast arc-flash response during power up.

Front-panel and sensor LEDs indicate sensor health and fault location.

Features & Benefits

FEATURES	BENEFITS
Compact	Fits into a wide range of arc-flash applications
Two optical sensor types	Point sensors or fiber-optic sensors can be used in any combination for coverage flexibility
Dual sensor inputs	One relay can monitor two arc-flash sensors
Adjustable light sensitivity	Allows for operation in bright environments and maximum sensitivity in dark environments
Discrete wire networking	Multiple AF0100 or AF0500 units can be interconnected to form a system
Fail-safe system	Continuous monitoring of optical sensors and inputs ensures protection
USB interface	Configuration software is easy to use with no drivers or software installation
Unit health	Ensures continuous protection with self diagnostic and remote unit-healthy indication
LED Indication	Trip and sensor status indication both on relay and sensors

Accessories

A

PGA-LS10 Point Sensor
Line-of-sight light sensor detects an arc as small as 3 kA within a 2-m half-sphere. Includes sensor health and trip indication.

B

PGA-LS20/PGA-LS30 Fiber-Optic Sensor
360° light sensor to run along bus bars. Includes sensor health and trip indication.

© 2021 Littelfuse, Inc

AF0500 SERIES
Arc-Flash Relay

Features & Benefits

FEATURES	BENEFITS
4 arc sensor inputs	Supports both point and fiber sensors
Arc-Flash trip time <1ms	Limits arc-flash damage and risk of injury
2 IGBT high speed trip outputs	Supports applications such as upstream breaker tripping or tie breaker tripping
Universal Power Supply	100-240 V ac, 24-48 V dc, or 110-250 V dc supply
Fail-safe system	Continuous monitoring of optical sensors and inputs ensures protection
LED indication (on unit and each sensor)	Trip and sensor status indicated both on relay and sensors
Discrete wire networking	Multiple AF0500 units can be interconnected to form a system
USB interface	Data logging and configuration software uses a USB interface with no drivers or software installation
Data logging	On-board event recorder for system diagnostics (2048 log lines)
Ethernet interface	Modbus® TCP communication

Ordering Information

ORDERING NUMBER	DESCRIPTION
AF0500-00	Arc-Flash Relay
AF0500-00-CC	Arc-Flash Relay, Conformally Coated

ACCESSORIES	REQUIREMENT
PGA-LS10	Required*
PGA-LS20, PGA-LS30	Required*
PGA-1100	Optional

Description

The AF0500 is a microprocessor-based arc-flash relay that limits arc-fault damage by detecting the light from an arc flash and rapidly tripping the feeder breaker. The unit is well suited for switchgear, transformer and power converter applications.

Sensors, inputs, and connections are health monitored to ensure fail-safe operation. A secondary solid-state trip circuit provides a redundant trip path. A USB port is used for configuration and access to event logs.

AF0500 includes an Ethernet interface and supports Modbus® TCP communication. Zone tripping, upstream breaker tripping and tie breaker tripping applications can be easily configured.

A number of control inputs allows interconnection of multiple AF0500 units to form a system.

Optical Sensors

The AF0500 accepts both PGA-LS10 point sensors and PGA-LS20/PGA-LS30 fiber-optical sensors. Thus any combination of fiber or point sensors is supported.

For fast fault location, front-panel and sensor LEDs indicate sensor health and which sensor detected an arc fault.

Sensor Placement

The AF0500 Arc-Flash Relay and sensors are easily installed in retrofit projects and new switchgear with little or no re-configuration. Simple applications work straight out of the box with no need of PC configuration. More complex systems with multiple power sources are configured using the relay's built-in USB interface software.

Generally, it is recommended to mount 1 or 2 sensors per cubicle to cover all horizontal and vertical bus bars, breaker compartments, drawers, and anywhere that there is a risk for an arc fault. Threading a fiber-optic sensor through the cabinets and in areas where point-sensor coverage is uncertain results in complete coverage and an added level of redundancy. Even if policy is to only work on de-energized systems, all maintenance areas should be monitored to prevent potential damage and additional cost.

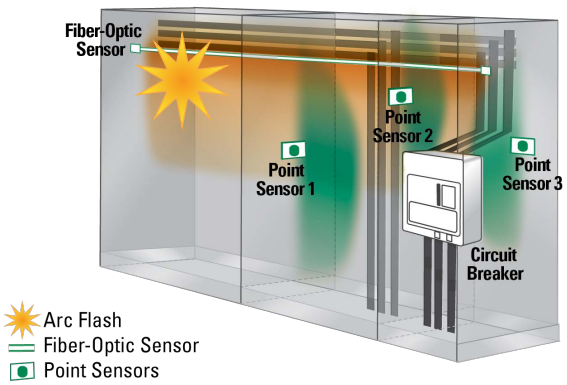

© 2021 Littelfuse, Inc

Applications

Zone Tripping

AF0500 can trip 2 separate zones. Sensors can be assigned to the zones individually through PC configuration.

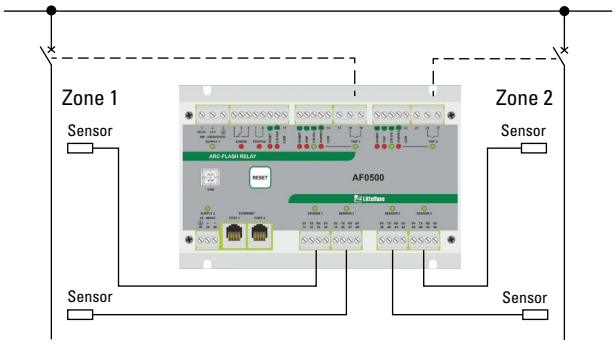

Upstream Breaker Tripping

In case of failure of the local circuit breaker to open, another trip command is sent after a short delay to an upstream breaker to clear the fault.

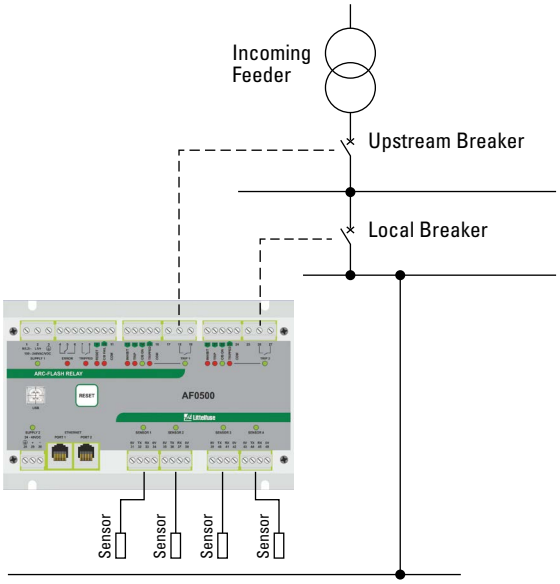

Tie Breaker Tripping

In case of an arc in one section of the switchboard, the AF0500 can trip both the incoming feeder and the tie breaker simultaneously. Thus the affected part of the switchboard is isolated from the non-affected part.

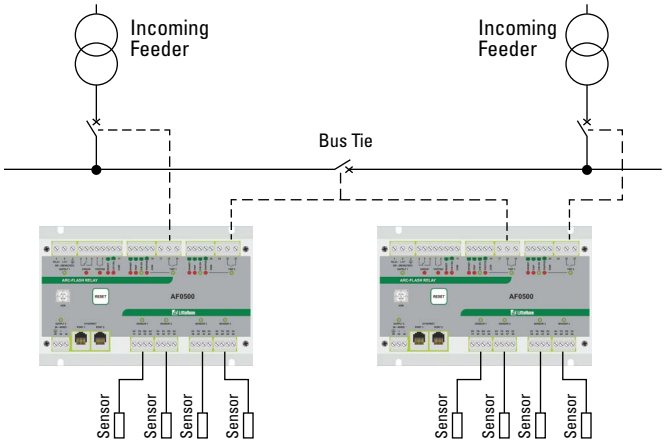

Accessories

PGA-LS10 Point Sensor
Line-of-sight light sensor detects an arc as small as 3 kA within a 2-m half-sphere. Includes Sensor health and trip indication.

PGA-LS20/PGA-LS30 Fiber-Optic Sensor
360° light sensor to run along bus bars. Sensor health and trip indication.

PGA-1100 Diode Logic Unit
This module allows multiple arc-flash relays to trip a common breaker, for example a tie-breaker.

Specifications

Power Supply	
Universal	100 to 240 V ac (+10%, -15%) 50/60 Hz, 20 VA, 110 to 250 Vdc (+10%, -20%) 8 W
Low Voltage	24 to 48 V dc (+10%, -20%), 4 W
Sensor Inputs	4 light sensor inputs for PGA-LS10, PGA-LS20 and PGA-LS30 sensors
Trip Outputs	2 IGBT switches
UL Rating	120/240 V ac, 1800 VA, 0.75 A maximum continuous, 125/250 V dc, 138 VA, 0.75 A maximum continuous
Supplemental Rating	
Make/Carry	30 A for 0.2s
Voltage Rating	24 to 300 V ac, 24 to 300 V dc
Current Rating	20 A for 2 s, 10 A for 5 s
Communication	Ethernet, 2 ports with internal Ethernet switch, Modbus® TCP
Dimensions	**H** 130 mm (5.1”); **W** 200 mm (7.9”); **D** 54 mm (2.1”)
Shipping Weight	0.9 kg (2 lb)
Operating Temp.	–40 °C to + 70 °C (–40 °F to 158 °F)
Approvals	UL Listed (UL508), CE, RCM, FCC, CSA
Warranty	5 years
Mounting	Surface, DIN (with optional D0050 adapter clips)

© 2021 Littelfuse, Inc

PGR-8800 SERIES (D1000)
Arc-Flash Relay

Simplified Circuit Diagram

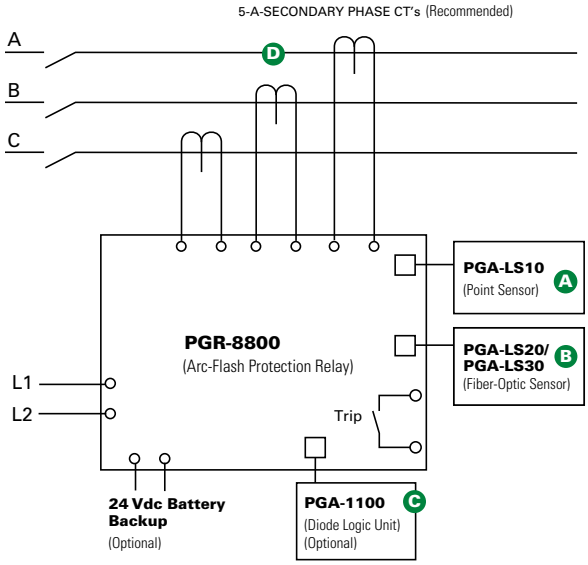

For detailed wiring diagram, see adjacent page.

Ordering Information

ORDERING NUMBER	DESCRIPTION
PGR-8800-00 (UL, CE, CSA, RCM)	Arc-Flash Relay
PGR-8800-00-CC (UL, CE, CSA, RCM)	Arc-Flash Relay, Conformally Coated

ACCESSORIES	REQUIREMENT
PGA-LS10	Required*
PGA-LS20, PGA-LS30	Required*
PGA-1100	Optional
Current Transformer	Recommended

*At least one sensor is required. However, the exact number of sensors for proper coverage depends on the application.

Description

The PGR-8800 is a microprocessor-based relay that limits arc-fault damage by detecting the light from an arc flash and rapidly tripping. Phase-current-transformer inputs are provided for current-constrained arc-flash protection and, when so equipped, a programmable definite-time overcurrent function can be enabled. An optical sensor on the PGR-8800 and adjustable trip level reduce the chance of nuisance tripping by setting a threshold for ambient light. Sensors, inputs, and connections are monitored to ensure fail-safe operation. A secondary solid-state trip circuit provides a redundant trip path. A USB port is used for configuration and access to event logs and graphs.

Optical Sensors

The PGR-8800 accepts both PGA-LS10 and PGA-LS20/ PGA-LS30 optical sensors, designed to collect light over a wide angle and with high sensitivity. For fast fault location, front-panel and sensor LED's indicate sensor health and which sensor detected an arc fault.

Sensor Placement

The PGR-8800 Arc-Flash Relay and sensors are easily installed in retrofit projects and new switchgear with little or no re-configuration. Even elaborate systems with multiple power sources take minutes to configure using the relay's built-in USB interface software.

Generally, it is recommended to mount 1 or 2 sensors per cubicle to cover all horizontal and vertical bus bars, breaker compartments, drawers, and anywhere that there is potential for an arc-fault. Threading a fiber-optic sensor through the cabinets and in areas where point-sensor coverage is uncertain results in complete coverage and an added level of redundancy. Even if policy is to only work on de-energized systems, all maintenance areas should be monitored to prevent potential damage and additional cost. At least one sensor should have visibility of an arc fault if a person blocks the other sensor(s).

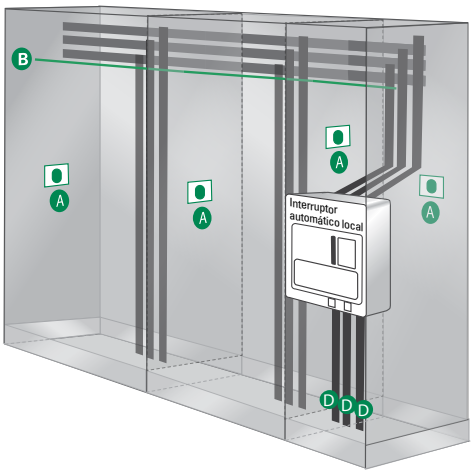

© 2021 Littelfuse, Inc

Features & Benefits

FEATURES	BENEFITS
Arc-Flash trip time <1 ms	Limits arc-flash damage and risk of injury
Multiple sensors (up to 24)	Single module can monitor 6 sensors. Up to 4 PGR-8800 units can be linked into one system
Fail-safe system	Continuous monitoring of optical sensors and inputs ensures protection
Redundant trip circuit	Solid-state backup arc-detection circuit adds a second layer of safety
Adjustable light sensitivity	Allows for operation in bright environments and maximum sensitivity in dark environments
LED indication (on unit and each sensor)	18 LEDs provide at-a glance status for module and I/O state
Current detection	Phase-CT inputs provide overcurrent protection and prevent nuisance trips
Optical detection	Point and fiber-optic sensors provide wide detection area with sensor health trip indication
Digital inputs (6)	Two each: remote trip, inhibit, and reset inputs
Service mode	Allows for system test without tripping
Trip coil contact	Solid-state 24-300 V dc/24-300 V ac IGBT
Indication contacts	Form C and status outputs
USB interface	Data logging and configuration software uses a USB interface with no drivers or software installation
Built-in sensor	Can be used in single-sensor systems, as a seventh sensor, and for calibration
Universal power supply/Battery backup	100-240 V ac, 14-48 V dc, or 110-250 V dc supply accepted. Ability to charge and run off an external, user-supplied 24 V dc battery.
Data logging	On-board event recorder helps with system diagnostics
Modbus	Remotely view measured values, event records & reset trips
Upstream Tripping	Ability to trip upstream device if the local breaker fails to clear the fault

Wiring Diagram

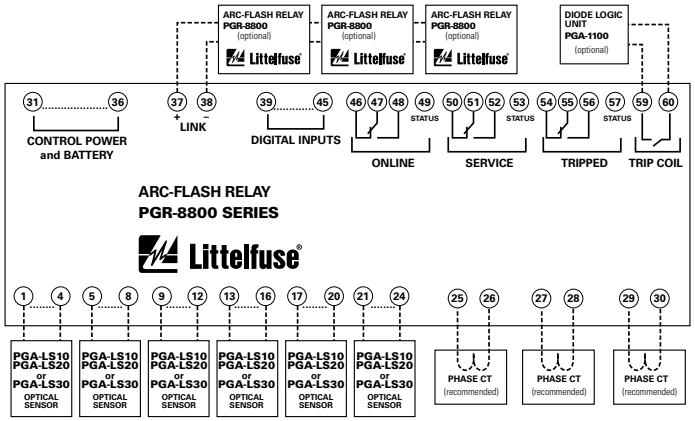

Accessories

A **PGA-LS10 Point Sensor**
Line-of-sight light sensor detects an arc as small as 3 kA within a 2-m half-sphere. Sensor health and trip indication. Dimensions: See PGR-8800 Manual

B **PGA-LS20/PGA-LS30 Fiber-Optic Sensor**
360° light sensor for tricky installations with many shadows or to run along bus bars. Sensor health and trip indication. Dimensions: See PGR-8800 Manual

C **PGA-1100 Diode Logic Unit**
This module allows multiple PGR-8800 relays to trip the same breaker, for example an upstream or a tie-breaker. Dimensions: **H** 80mm (3.15") **W** 20mm(0.79") **D** 70mm(2.76")

D **Current Transformers**
Eliminate nuisance arc-flash trips and use for overcurrent protection.

Specifications

IEEE Device Numbers	Overcurrent (50), Arc Flash (AFD)
Input Voltage	100-240 V ac, 14-48 V dc, and 110-250 V dc
Dimensions	**H** 130 mm (5.1"); **W** 200 mm (7.9"); **D** 54 mm (2.1")
Optical Trip Settings	9-25 klux, 800 µs-20 s
Current Trip Setting (A)	Programmable
Indication Contact Mode	Fail-safe
Trip Coil Voltage[1]	24-300 Vdc, 24-300 Vac
Trip Coil Contact Mode	Selectable fail-safe or non-fail-safe
Redundant Trip Circuit	Standard feature
Input Monitoring	Standard feature
USB Interface	Standard feature
Trip, Reset, Service Buttons	Standard feature
Expandable System	Link up to 4 PGR-8800 units
Warranty	5 years
Mounting	Surface, DIN (with D0050 adapter clips)
Approvals	UL, CE, CSA, RCM, FCC, DNV type approval, ABS type approval

NOTE (1) - Contact Littelfuse for trip coil voltages higher than 300 Vdc/Vac.

Littelfuse reserves the right to make product changes, without notice. Material in this document is as accurate as known at the time of publication. Visit Littelfuse.com for the most up-to-date information.

© 2021 Littelfuse, Inc

PC-105 SERIES

Pump controller with duplex, triplex or quadplex functionality or 5-channel relay

Wiring Diagram

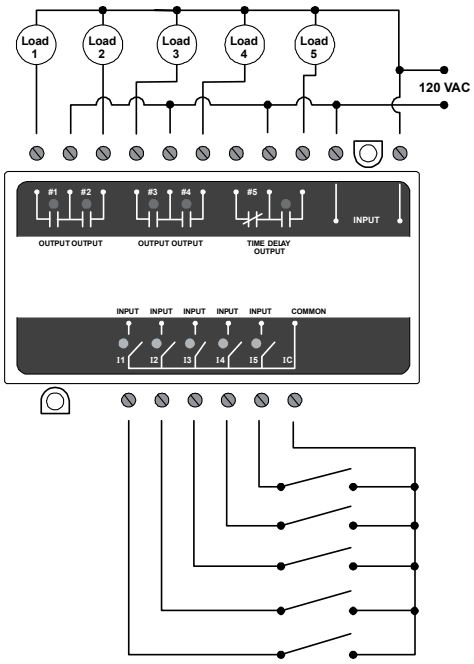

Description

The PC-105 is a 5-channel pump controller designed to handle multiple pump applications. Alternatively, it can operate as a 5-channel switch.

The PC-105's control functions support all of the popular industry-standard multi-pump, pump-up and pump-down configurations.

It can indicate low, high and out-of-sequence alarms and use alternating and non-alternating pump control. The non-alternating pump can be used as a jockey pump or emergency pump.

Using the built-in DIP switches, individual pumps can be disabled when taken out of service for repair or maintenance.

Features

- Compact design
- Low, high and out-of-sequence alarms
- Variable time delay/lag pump delay from 2-255 seconds
- Duplex SPS (separate pump stop) pump control
- Duplex, triplex or quadplex pump control
- Pump-up or pump-down functions
- External silence, reset and alternation configuration
- Five-channel relay configuration
- DIN rail or surface mountable

Specifications

Input Characteristics	
Supply Voltage	120 V ac
Frequency	50*/60Hz
Functional Characteristics	
Probe Sense Voltage	5 V dc continuous
Output Characteristics	
Relay Output Rating:	
Pilot Duty	480 VA @ 240 V ac, B300
General Purpose	7A @ 240 V ac
General Characteristics	
Temperature Range	-20 °C to 55 °C (-4 °F to 131 °F)
Maximum Input Power	4 W
Wire range	12 to 20 AWG
Terminal Torque	4.5 in.-lbs. (max.)
Pump In-rush delay	2 seconds
Standards Passed	
Electrostatic Discharge (ESD)	IEC 61000-4-2, Level 3, 6kV contact, 8kV air.
Radio Frequency Immunity (RFI)	IEC 61000-4-3, Level 3, 10V/m
Fast Transients	IEC 61000-4-4, Level 3, 4kV input power 2kV inputs/outputs
Safety Marks	
UL	UL508 (File #E68520)
Dimensions	**H** 94.06 mm (3.703"); **W** 127.64 mm (5.025"); **D** 59.69 mm (2.35")
Weight	1.2 lbs. (19.2 oz., 544.31 g)
Mounting Method	35 mm DIN rail or Surface Mount (#6 or #8 screws)

*Note: 50Hz will increase all delay timers by 20%.

© 2021 Littelfuse, Inc

PC-102 SERIES

Dual seal-leak detector or seal-leak & over-temperature detector

Wiring Diagram

PC-102CICI-DL

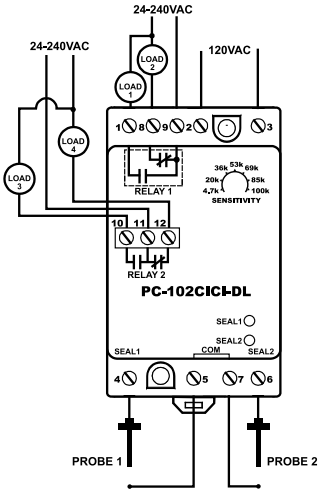

PC-102CICI-LT

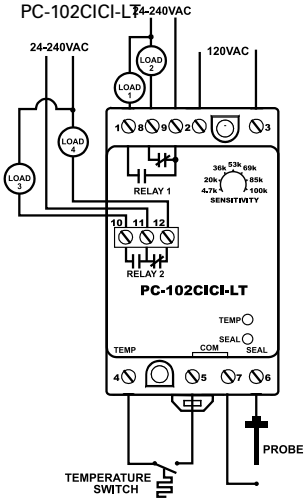

Ordering Information

MODEL	LINE VOLTAGE	DESCRIPTION
PC-102CICI-DL	120 V ac nominal	Dual seal-leak detector uses inputs to sense seal failures and energize the output relay. Input logic direct or inverted is DIP switch selectable
PC-102CICI-LT	120 V ac nominal	Seal-leak and over-temperature detector uses one input to sense seal failures and the temperature input to detect motor overheating. Configurable to suit various probes. Seal input logic direct or inverted, plus over-temperature trip reset automatic or manual, is DIP switch selectable

Description

The PC-102 is a dual-channel switch that provides dual protection against seal failures and over-temperature in submersible pumping applications.

Both units have two form-C isolated output relays and two LEDs, which illuminate when each associated output relay is energized.

The sensitivity adjustment (4.7k-100kOhms) allows you to define the input impedance at which the output relays will change state. The sensitivity for the over-temperature detector can be set to 4k Ohms with use of the DIP switches.

This unit may not be compatible with Flygt pumps.

Features & Benefits

FEATURES	BENEFITS
Finger-safe terminals	Meets IEC 61000 safety requirements
Compact design for DIN rail or surface mount	Allows flexiblility in panel installation
LED status indicator	Visual indication of relay engagement
Two input channels	Flexibility for pump-up/pump-down or two-channel switch applications

Specifications

Input Characteristics	
Frequency	50/60 Hz
Functional Characteristics	
Probe Sense Voltage	5 V dc pulsed
Sensitivity	4.7k-100kΩ
Sensitivity (for temp)	Selectable 4kΩ with DIP switches
Input Logic	Direct or inverted
Debounce Time Delay	0.5 or 2 seconds
Output Characteristics	
Relay Output Rating (2 Form C isolated)	
Pilot Duty	180 VA @ 120 V ac, C150
General Purpose	5A @ 240 V ac
General Characteristics	
Temperature Range	-20 °C to 55 °C (-4 °F to 131 °F)
Maximum Input Power	2 W
Depluggable Connector	Phoenix Contact-Series MSTB plugs
Output Relay Status Indicators	LEDs
Terminal Torque	4.5 in.-lbs.
Wire range	12-20 AWG
Standards Passed	
Electrostatic Discharge (ESD)	IEC 61000-4-2, Level 3, 6 kV contact, 8 kV air.
Radio Frequency Immunity (RFI)	IEC 61000-4-3, Level 3, 10V/m
Fast Transients	IEC 61000-4-4, Level 3, 4 kV input power 2kV inputs/outputs
Safety Marks	
UL	UL508 (File #E68520)
Dimensions	**H** 88.9 mm (3.5"); **W** 52.93 mm (2.08"); **D** 59.69 mm (2.35")
Weight	0.9 lb. (14.4 oz., 408.23 g)
Mounting Method	35mm DIN rail or Surface Mount (#6 or #8 screws)

© 2021 Littelfuse, Inc

460-15-100-LLS
Single-Channel Liquid Level Sensor

Description

The 460-15-100-LLS is a liquid level sensor to detect the presence of conductive liquids. A probe is mounted at the desired tank level and connected to the PumpSaver®. When the probe is submersed, the relay's output contacts will change state as soon as the debounce time expires. The adjustable debounce timer is intended to prevent nuisance actuating due to waves or splashing in the tank.

Relay logic can be inverted so the relay's output contacts change state when the probe is no longer submersed. This makes the unit versatile for use in pump-up and pump-down applications.

Wiring Diagram

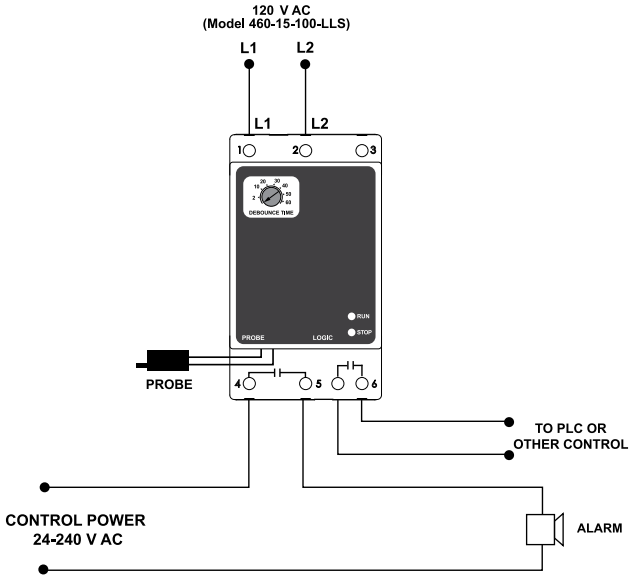

Features & Benefits

FEATURES	BENEFITS
Unique probe protection logic	Probes are protected from scale build up through pulsed dc signal between the probes
Invertible relay logic	Allows flexibility to be used in pump-up and pump-down applications
Adjustable debounce timer	Prevents nuisance actuating caused by waves or splashing in the tank
LED status indicators	Provides visual indication of the relay status

Specifications

Input Characteristics	
Control Voltage	110/120 V ac nominal
Frequency	50/60 Hz *(Note: 50 Hz will increase all delay timers by 20%)*
Sensitivity	100 kΩ
Functional Characteristics	
Probe Sense Voltage	5 V dc pulsed
Debounce Time Delay	2-60 seconds
Output Characteristics	
Output contact Rating – (Two Form A - SPST)	
Pilot Duty	360 VA @ 240 V ac
General Purpose	8 A @ 240 V ac
General Characteristics	
Ambient Temperature Range	
Operating	-40 °C to 70 °C (-40 °F to 158 °F)
Storage	-40 °C to 80 °C (-40 °F to 176 °F)
Maximum Input Power	2 W
Class of Protection	IP20, NEMA 1 (finger safe)
Relative Humidity	10-95 %, non-condensing per IEC 68-2-3
Terminal Torque	4.5 in.-lbs.
Wire	12-20 AWG
Standards Passed	
Electrostatic Discharge (ESD)	IEC 61000-4-2, Level 3, 6 kV contact, 8 kV air
Radio Frequency Immunity, Radiated	150 MHz, 10 V/m
Fast Transient Burst	IEC 61000-4-4, Level 3, 3.5 kV input power and controls
Surge	
IEC	IEC 61000-4-5, Level 3, 4 kV line-to-line; Level 4, 4 kV line-to-ground
ANSI/IEEE	C62.41 Surge and Ring Wave Compliance to a level of 6 kV line-to-line
Hi-Potential Test	Meets UL 508 (2 x rated V + 1000 V for 1 min.)
Safety Marks	
UL	UL 508 (File #E68520)
Enclosure	Polycarbonate
Dimensions	**H** 88.9 mm (3.5"); **W** 52.93 mm (2.08"); **D** 59.69mm (2.35")
Weight	1 lb. (16 oz., 453.59 g)
Mounting Method	35 mm DIN rail or Surface Mount (#6 or #8 screws)

© 2021 Littelfuse, Inc

PC-XXX-LLC-CZ / PC-XXX-LLC-GM SERIES

Liquid level control

Wiring Diagram

TYPICAL WIRING DIAGRAM FOR PC-XXX-LLC-CZ

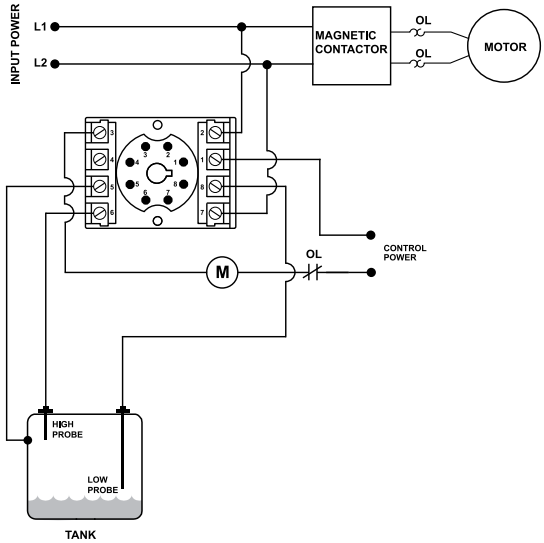

TYPICAL WIRING DIAGRAM FOR PC-XXX-LLC-GM

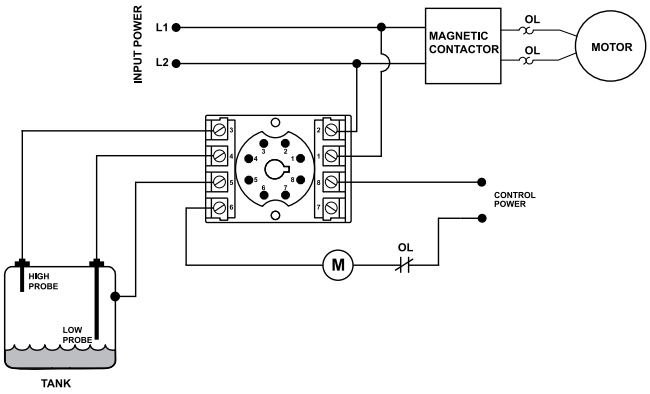

Description

The PC-xxx-LLC-CZ and PC-xxx-LLC-GM series are liquid level control relays used to control conductive liquid pumping operations in a pump-up or pump-down application. The units come in two different voltage ranges (see specs below).

The units have an adjustable sensitivity knob (4.7 k to 100 k ohms) that is set according to the resistance level at which you want the probes (sold separately) to sense the conductive liquid. The units have a built-in debounce time delay that prevents the relay from energizing if the probe resistance momentarily goes above or below the sensitivity setpoint (due to liquid splashing in the tank).

The units operate their internal relay based on inputs from a high and low probe and a common reference (when a conductive tank is used) or common probe (when a non-conductive tank is used).

PC-xxx-LLC-CZ

- Compatible with Crouzet's PNR & PNRU series liquid level control

PC-xxx-LLC-GM

- Compatible with Gems' Series 16M general purpose control

Must use Model OT08PC or P1011-6 socket for UL Rating!

Note: Manufacturer's recommended screw terminal torque for the OT Series Octal Sockets is 12 in.-lbs.

Features & Benefits

FEATURES	BENEFITS
Debounce time delay (2 seconds)	Prevents rapid cycling of the pump due to turbulance in the tank
Adjustable sensitivity (4.7 to 100 K ohms)	Allows user to fine tune the sensing resistance to prevent false tripping due to foam or debris
Dual probe design (plus a common)	Allows user the ability to set the level differential required

Ordering Information

MODEL	LINE VOTAGE	DESCRIPTION
PC-100-LLC-CZ	95-120 V ac	Compatible with Crouzet's PNR & PNRU series liquid level control
PC-200-LLC-CZ	190-240 V ac	Compatible with Crouzet's PNR & PNRU series liquid level control
PC-100-LLC-GM	95-120 V ac	Compatible with Gems' series 16M liquid level control
PC-200-LLC-GM	190-240 V ac	Compatible with Gems' series 16M liquid level control

Accessories

OT08PC 8-pin Octal Socket
Octal Socket for plug-in units. 8-pin surface & DIN-rail mountable. Rated for 10 A @ 600 V ac.

© 2021 Littelfuse, Inc

Specifications

Input Characteristics	
Supply Voltage	
PC-100-LLC-CZ	95-120 V ac
PC-100-LLC-GM	95-120 V ac
PC-200-LLC-CZ	190-240 V ac
PC-200-LLC-GM	190-240 V ac
Frequency	50/60 Hz
Functional Characteristics	
Probe Sense Voltage	5 V dc pulsed
Debounce Time Delay	2 seconds
Probe Sensitivity	4.7 k to 100 k adjustable
Output Characteristics	
Output Contact Rating	
Pilot Duty	480 VA @ 240 V ac
General Purpose	10 A @ 240 V ac
General Characteristics	
Temperature Range	-40 °C to 70 °C (-40 °F to 158 °F)
Maximum Input Power	5 W
Sandards Passed	
Electrostatic Discharge (ESD)	IEC 61000-4-2, Level 3, 6 kV contact, 8 kV air.
Radio Frequency Immunity (RFI)	150 MHz, 10 V/m
Fast Transients	IEC 61000-4-4, Level 3, 2 kV input power and controls
Safety Marks	
UL (OT08PC octal socket required)	UL 508 (File #E68520)
Dimensions	**H** 44.45 mm (1.75"); **W** 60.33 mm (2.375"); **D** 104.78 mm (4.125")
Weight	0.65 lb. (10.4 oz., 294.84 g)
Mounting Method	DIN rail or surface mount (plug into OT08PC socket)
Socket Available	Model OT08PC (UL Rating 600 V)

The 600 V socket can be surface mounted or installed on DIN Rail.

© 2021 Littelfuse, Inc

201-100-SLD
Single-Channel Seal-Leak Detector

Description

The model 201-100-SLD is an 8-pin plug-in style seal-leak detector to sense seal failures on submersible pumps. A microcontroller-based relay that monitors the shaft seal of a submersible pump motor. A resistive probe is installed in the seal cavity. If water leaks into the pump, the resistance measured by the probe decreases. When the resistance drops below the sensitivity setpoint, the unit will trip and the relay contacts will change state. The unit will automatically reset when a fault is cleared.

Features & Benefits

- LED status indicator
- Compact plug-in design
- DIN rail or surface mountable via octal base

Wiring Diagram

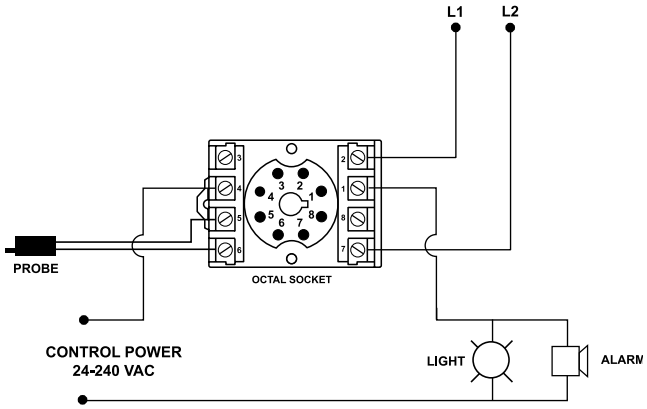

Note: Manufacturer's recommended screw terminal torque for the RB Series and OT Series Octal Sockets is 12 in.-lbs.

Accessories

OT08PC 8-pin Octal Socket
Octal Socket for plug-in units. 8-pin surface & DIN rail mountable. Rated for 10A @ 600 V ac.

Specifications

Control Voltage	110/120 V ac nominal
Frequency	50/60 Hz
Sensitivity	4.7k-100 kΩ
Probe Sense Voltage	5 V dc pulsed
Output contact Rating	SPDT
Pilot Duty	480 VA @ 240 V ac
General Purpose	10A @ 240 V ac
Operating Temperature	-40 °C to 70 °C (-40 °F to 158 °F)
Storage	-40 °C to 80 °C (-40 °F to 176 °F)
Maximum Input Power	5 W
Relative Humidity	10-95%, non-condensing per IEC 68-2-3
Electrostatic Discharge (ESD)	IEC 61000-4-2, Level 3, 6 kV contact, 8 kV air
Radio Frequency Immunity, Radiated	150MHz, 10V/m
Fast Transient Burst	IEC 61000-4-4, Level 3, 3.5 kV input power and controls
IEC	IEC 61000-4-5, Level 3, 4 kV line-to-line; level 4, 4 kV line-to-ground
ANSI/IEEE	C62.41 Surge and Ring Wave Compliance to a level of 6 kV line-to-line
Hi-Potential Test	Meets UL508 (2 x rated V + 1000V for 1 min.)
UL*	UL508 (File #E68520)
Enclosure	Polycarbonate
Dimensions	**H** 44.45 mm (1.75"); **W** 60.325 mm (2.375"); **D** (with socket) 104.78 mm (4.125")
Weight	0.7 lb. (11.2 oz., 317.51 g)
Mounting Method	DIN rail or surface mount (plug into OT08PC socket)
Socket Available	Model OT08PC (UL Rating 600V)
Approvals	UL, CE

*Must use Model OT08PC socket for UL Rating!
The 600 V socket can be surface mounted or installed on DIN Rail.

© 2021 Littelfuse, Inc

460 SERIES
3-Phase Voltage Monitor

Wiring Diagram

TYPICAL WIRING DIAGRAM FOR MODEL 460 WITH MOTOR CONTROL

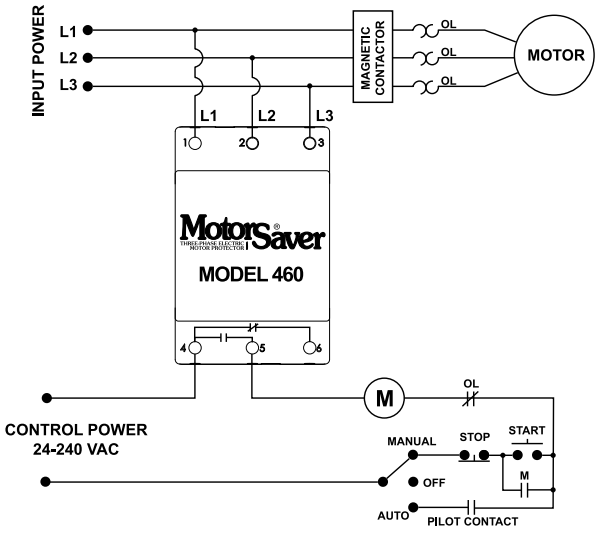

Description

The 460 is a 3-phase voltage monitor that protects 190-480 V ac or 475-600 V , 50/60 Hz motors regardless of size. The product provides a user selectable nominal voltage setpoint and the voltage monitor automatically senses line voltage.

This unique microcontroller-based voltage and phase-sensing device constantly monitors the 3-phase voltages to detect harmful power line conditions such as low, high, and unbalanced voltage, loss of any phase, and phase reversal. When a harmful condition is detected, the MotorSaver® output relay is deactivated after a specified trip delay. The output relay reactivates after power line conditions return to an acceptable level for a specified amount of time (restart delay). The trip and restart delays prevent nuisance tripping due to rapidly fluctuating power line conditions.

All 460 models feature adjustable 1-30 second trip delay, 1-500 second restart delay, 2-8 % voltage unbalance trip point, and one form C contact except where noted below.

Features & Benefits

FEATURES	BENEFITS
Auto-sensing wide voltage range	Automatically senses system voltage between 190 - 480VAC or 475-600VAC. Saves set-up time
Adjustable trip & restart delay settings	Prevent nuisance tripping due to rapidly fluctuating power line conditions
Microcontroller based circuitry	Improved accuracy and higher reliability
Advanced LED diagnostics	Quick visual indicator for cause of trip and relay status
Adjustable voltage unbalance trip setting	Provides reliable protection when regenerative voltage is present

Ordering Information

MODEL	VOLTAGE	DESCRIPTION
460	190-480 V ac	Automatically senses line voltage, adjustable 1-30 second trip delay, 1-500 second restart delay, and 2-8 % voltage unbalance trip point
460-L	190-480 V ac	Fixed 4 second trip delay and 1 second for single-phase faults, and fixed 6% voltage unbalance trip point
460-14	190-480 V ac	Equipped with 2 sets of contacts: Form A (NO) and Form B (NC). Used for applications requiring 2 different voltages such as 5 V dc for a PLC input and 115 V ac for an alarm
460-575	475-600 V ac	Commonly used in Eastern Canada and on generator units that generate 600 V ac power
460-575-14	475-600 V ac	Commonly used in Eastern Canada and on generator units that generate 600 V ac power. Equipped with 2 sets of contacts: Form A and Form B
460-15	190-480 V ac	Equipped with 2 sets of Form A (NO) contacts. Used on applications where two different units are to be controlled at once such as a unit that has separate contacts for a compressor and a fan
460-MR	190-480 V ac	Equipped with a 2-prong connection for a normally open push button mounted outside the panel. Used in applications requiring an external manual reset button
460-VBM	190-480 V ac	Fixed 6% voltage unbalance trip point. User adjustable low and high voltage trip points
460-400HZ	190-480 V ac	For use with 400Hz power supply
460-OEM	190-480 V ac	Bulk package of 460, 20 units
460L-OEM	190-480 V ac	Bulk package of 460-L, 20 units

© 2021 Littelfuse, Inc

Specifications

Frequency	50/60Hz
Low Voltage (% of setpoint)	
Trip	90% ±1%
Reset	93% ±1%
High Voltage (% of setpoint)	
Trip	110% ±1%
Reset	107% ±1%
Voltage Unbalance (NEMA)	
Trip	2-8% adjustable
Reset	Trip setting minus 1% (5-8%) Trip setting minus 0.5% (2-4%)
460L	6% UB fixed (4.5% reset)
Trip Delay Time	
Low, High and Unbalanced Voltage	1-30 seconds adjustable
460L	4 seconds fixed
Single-Phase Faults (>15% UB)	1 second fixed
Restart Delay Time	
After a Fault	1-500 seconds adjustable
After a Complete Power Loss	1-500 seconds adjustable
Output Contact Rating	
Form C	
Pilot Duty	480VA @ 240 V ac, B300
General Purpose	10A @ 240 V ac
Form A & Form B	
Pilot Duty	360VA @ 240 V ac, B300
General Purpose	8A @ 240 V ac

Ambient Temperature Range	
Operating	-20 °C to 70 °C (-4 °F to 158 °F)
Storage	-40 °C to 80 °C (-40 °F to 176 °F)
Maximum Input Power	6 W
Class of Protection	IP20, NEMA 1 (finger safe)
Relative Humidity	10-95 %, non-condensing per IEC 68-2-3
Terminal Torque	4.5 in.-lbs.
Wire Type	Stranded or solid 12-20 AWG, one per terminal
Standards Passed	
Electrostatic Discharge (ESD)	IEC 61000-4-2, Level 3, 6kV contact, 8kV air
RFI, Radiated	150 MHz, 10V/m
Fast Transient Burst	IEC 61000-4-4, Level 3, 3.5kV input power and controls
Surge	
IEC	IEC 61000-4-5, Level 3, 4kV line-to-line; Level 4, 4kV line-to-ground
ANSI/IEEE	C62.41 Surge and Ring Wave Compliance to a level of 6kV line-to-line
Hi-potential Test	Meets UL508 (2 x rated V +1000V for 1 minute)
Safety Marks	
UL	UL508 (File #E68520)
CE	IEC 60947-6-2
Enclosure	Polycarbonate
Dimensions	**H** 88.9 mm (3.5”); **W** 52.9 mm (2.08”); **D** 59.69 mm (2.35”)
Weight	0.7 lb. (11.2 oz., 317.51 g)
Mounting Method	35 mm DIN rail or Surface Mount (#6 or #8 screws)
460-MR (manual reset)	External NO pushbutton required.

© 2021 Littelfuse, Inc

EL3100 SERIES
Ground-Fault & Phase-Voltage Indicator

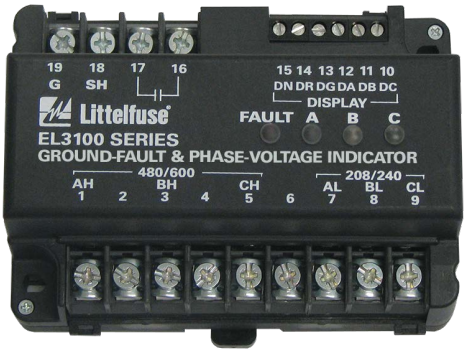

Simplified Circuit Diagram

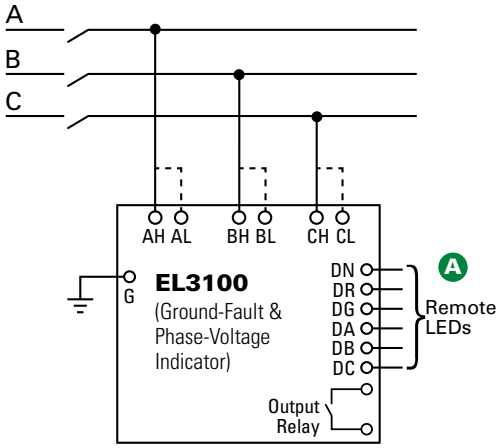

Ordering Information

ORDERING NUMBER	MOUNTING
EL3100-00	DIN, Surface

ACCESSORIES	REQUIREMENT
RK-310X-0Y	Optional

Note: X=R for red LED and G for green LED
Y=0 for no label and 1 for a ground-fault label

Description

The EL3100 is a self-powered ground-fault and phase- voltage indication system for 3-phase systems. The EL3100 meets the National Electrical Code (NEC) and the Canadian Electrical Code (CEC) requirements for ground detectors for ungrounded alternating-current systems. Voltage connections are provided on the EL3100 for 208, 240, 480, and 600-V systems. Three green LED's on the EL3100 indicate the presence of phase-to-ground voltage and one red LED indicates a ground fault. The EL3100 can operate stand-alone or with up to five remote LED indicators. A solid-state relay output provides indication of a ground fault. The output relay is closed when the 3-phase neutral voltage shifts as the result of ground leakage.

Features & Benefits

FEATURES	BENEFITS
NEC and CEC Code compliant	Meets National Electrical Code (NEC) Article 250.21 and Canadian Electrical Code Part 1, Section 10-400 requirements for ungrounded systems
Low-voltage remote LEDs	System voltage is not present at the remote LED location
Phase-voltage indication	Indicates the presence of voltage on both grounded and ungrounded systems
Output relay	Allows for remote ground-fault indication

Accessories

A

Remote LEDs
High-intensity 16-mm IP67 LED lamps available in red and green colors.

Specifications

Input Voltage	Input L: 208/240 V ac Input H: 480/600 V ac
Dimensions	**H** 87.0 mm (3.43") **W** 112.5 mm (4.43") **D** 56.0 mm (2.2")
Approvals	CSA certified, UL Listed (E340889), RCM (Australia)
Conformally Coated	Standard feature
Warranty	5 years
Mounting	DIN, Surface

© 2021 Littelfuse, Inc

LSR-0

Self-powered load sensor/low-cost proof relay

Wiring Diagram

TYPICAL WIRING DIAGRAM FOR REFRIGERATION AND OIL FAILURE CONTROL

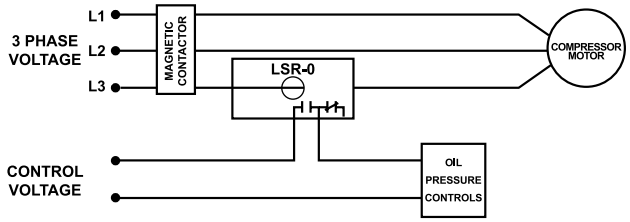

TYPICAL WIRING DIAGRAM FOR BUILDING AUTOMATION

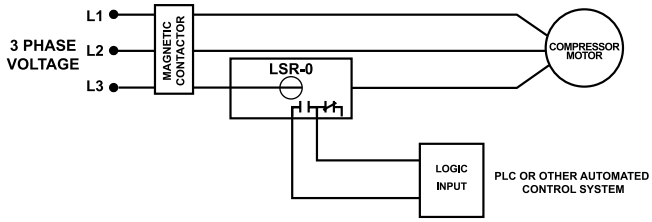

TYPICAL WIRING DIAGRAM FOR BUILDING AUTOMATION

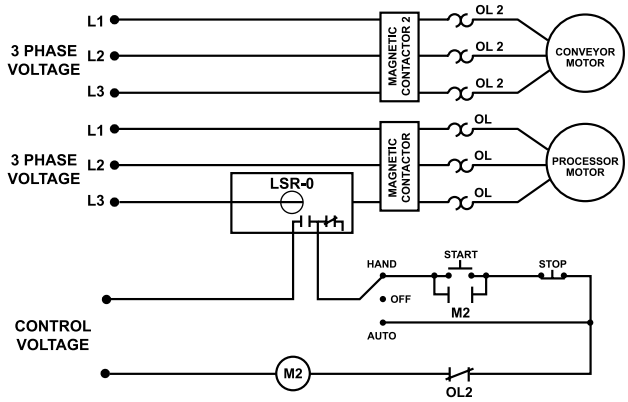

Description

The LSR-0 is a self-powered load sensor intended for use as a proof relay. It is used to verify that current is flowing as intended. It has a guaranteed 15A pull-in current and 2.5A drop-out current. Proof relays are typically used to interlock fans, compressors, motors, heating elements and other devices. The LSR-0 is self-powered, that is, it draws its power from the wire being monitored so it does not require separate control power wiring.

Features

- Self-powered
- Low cost proof relay
- Can monitor up to 135A loads

Specifications

Max Current Ratings	135A continuous
Functional Characteristics	
Turn-on Threshold	Fixed, 15A (max.)*
Turn-off Threshold	2.5A (min.)
Power	Induced from conductor
Isolation	600 V ac rms
Output Characteristics	
Relay Output Rating:	
Pilot Duty	480 VA @ 240 V ac
General Purpose	10A
General Characteristics	
Temperature Range	-20 °C to 70 °C (-4 °F to 158 °F)
Wire Size	#12-24AWG
Hole Size	0.725" diameter
Terminal Torque	7 in.-lbs.
Safety Marks	
CSA, CSA-NRTL/C	(File #46510)
Dimensions	**H** 42.42 mm (1.67"); **W** 58.42 mm (2.3"); **D** 90.43 mm (3.56")
Weight	0.35 lb. (5.6 oz., 158.76 g)
Mounting Method	Four #6 screws 3/4" in length

*Conductors may be looped for smaller motor applications.
Caution: This product should not be relied upon solely for safety of life or safety applications.

© 2021 Littelfuse, Inc

LSRX / LSRX-C SERIES

Self-powered load sensor, low-cost proof relay

Wiring Diagram

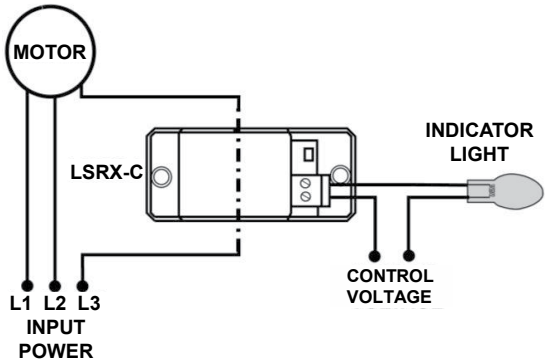

Ordering Information

MODEL	DESCRIPTION
LSRX	Fast-on terminal
LSRX-C	Depluggable screw terminals
LSRX-OEM	Fast-on terminals, 10 pack

Description

The LSRX/LSRX-C Series are AC current sensors designed to energize the output contact whenever 4.5 Amps or greater is present. The LSRX/LSRX-C Series is used commonly as an AC current proof relay to indicate if a motor is operating. It can also be used to interlock fans, compressors and motors; to indicate equipment status such as feed rates, tool wear, loss of prime on pumps, mixer viscosity and all types of current sensing conditions or to stage pump motors, chillers, or other machinery.

This device combines a current transformer (CT), transducer and high current output relay together to switch alarm circuits, contactors and most resistive or inductive loads. The LSRX/LSRX-C Series can perform the function of an auxiliary contact, yet has the advantages of universal application and isolation.

Features & Benefits

FEATURES	BENEFITS
Self-powered	Eliminates need for separate control voltage. Draws power from wire being monitored
Quick-connect terminals	Saves time at installation
LED indication	Visual indication of relay status
Built in current sensor will monitor up to 200A loads	Eliminates the need for a stand alone current transformer and also provides isolation between the monitored and control circuits

Accessories

Informer IR Kit-36 (36" infrared adapter cable)
Attaches to the face of the unit to provide remote diagnostics without opening the panel.

Specifications

Input Characteristics

Operating Current	5-200 A Continuous
Minimum Pull-in Current	4.5A (typical), 7.0A (max)*
Power	Induced from AC conductor

Output Characteristics

Relay Output Rating (SPST - Form A)	
Pilot Duty	480 VA @ 240 V ac, B300
General Purpose	5 A @ 240 V ac
Electrical Life	$1x10^5$
Mechanical Life	$1x10^7$
Maximum Conductor Diameter	0.7 in.
Output Terminals	
LSRX	0.25" quick-connect fast-ons
LSRX-C	depluggable screw terminals
Torque Rating	3.0 in.-lbs.

© 2021 Littelfuse, Inc

General Characteristics	
Temperature Range:	
Operating	-20 °C to 70°C (-4 °F to 158 °F)
Storage	-40 °C to 80 °C (-40 °F to 176 °F)
Hole Size	0.72" diameter
Wire Size	12-26 AWG
Output Relay Status Indicator	LED
Relative Humidity	10-95%, non-condensing per IEC 68-2-3
Standards Passed	
Electrostatic Discharge (ESD)	IEC 61000-4-2, Level 2, 4kV contact, 4kV air
Fast Transient Burst	IEC 61000-4-4, Level 3, 2kV power, 1kV input/output
Surge	
IEC	61000-4-5, Level 3, 2kV line-to-line; 2kV line-to-ground
Safety Marks	
UL	UL508 Recognized (File #E68520)
Dimensions	**H** 68.58 mm (2.7"); **W** 28.7 mm (1.13"); **D** 63.5 mm (2.5")
Weight	0.3 lb. (4.8 oz., 136.08 g)
Mounting Method	Surface Mount

*Conductors may be looped for smaller motor applications.

© 2021 Littelfuse, Inc

SE-330, SE-330HV SERIES
Neutral-Grounding-Resistor Monitor

Simplified Circuit Diagram

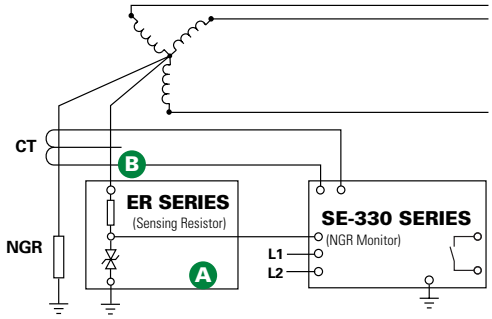

For detailed wiring diagram, see adjacent page.

Ordering Information

ORDERING NUMBER		POWER SUPPLY	COMM			K4 UNIT HEALTHY CONTACT
SE-330	-	X	X	-	0	X
SE-330 for applications 35 kV or less SE-330HV for 72 kV applications		0=120/240 Vac/Vdc 2=48 Vdc	0=USB Only 1=DeviceNet 3=EtherNet (Dual RJ45) 4=EtherNet (SC Fiber & RJ45) 5=EtherNet (Dual SC Fiber) 6=IEC61850 (Dual RJ45) 7=IEC61850 (SC Fiber & RJ45) 8=IEC61850 (Dual SC Fiber)			0=Normally Open 1=Normally Closed

NOTE: For Australian applications, see the SE-330AU.

REQUIRED ACCESSORIES	OPTIONAL ACCESSORIES
ER Series Sensing Resistor	SE-IP65CVR-G
Current Transformer	SE-MRE-600
	RK-332
	NGRM-ENC
	PGA-0520
	SE-330-SMA

Description

The SE-330 is an advanced ground-fault and neutral-grounding-resistor monitoring relay that is compliant with Rule10-302 of the 2018 Canadian Electrical Code Part I (CE Code). It measures neutral current, neutral-to-ground voltage, and neutral-to-ground resistance. It provides continuous monitoring of the neutral-to-ground path to verify that the neutral-grounding resistor (NGR) is intact and that it has not been bypassed or shorted. An open NGR renders current-sensing ground-fault protection inoperative and could result in a false belief that the system is functioning properly. A shorted NGR results in higher-than-expected ground-fault current. The SE-330 can be used with low- and medium-voltage transformers and generators with low- or high-resistance grounding used in processing, manufacturing, chemical, pulp and paper, petroleum, and water-treatment facilities. For high-voltage applications, use the SE-330HV. For applications that require conformance to Australian standards, use the SE-330AU.

Resistor Monitoring

The SE-330 combines the measured values of resistance, current, and voltage to continuously determine that an NGR is intact. It is able to detect an open or shorted resistor with or without a ground fault present. Sensing resistors are matched to the system voltage and are used to monitor NGRs on systems up to 72 kV.

Ground-Fault Monitoring

The SE-330 uses an application-appropriate current transformer to reliably detect ground-fault currents as small as 100 mA. Discrete-Fourier Transform (DFT) filtering ensures that false trips due to harmonic noise from adjustable-speed drives do not occur. Should the resistor open and a ground fault subsequently occur, the SE-330 will detect the fault through voltage measurement, while other current-only sensing relays would be ineffective.

Pulsing Ground-Fault Location

The SE-330 is capable of controlling a pulsing contactor, which is used to switch the NGR resistance in a pulsing-compatible NGR package. The resulting ground-fault current is distinguishable from charging currents and noise and will only appear upstream of the ground fault, making fault location fast and easy, even without isolating feeders or interrupting loads.

Accessories

A

ER Series Sensing Resistor
Required interface between the power system and the SE-330/SE-330HV. Eliminates hazardous voltage levels at the relay.

B

ELCT5 Series Ground-Fault Current Transformer
Sensitive ground-fault current detection (5 A primary).

ELCT30 Series Ground-Fault Current Transformer
Sensitive ground-fault current detection (30 A primary).

Other Current Transformer
For low-resistance NGRs choose a CT primary approximately equal to the NGR rating. Inputs are provided for 1- and 5- A- secondary CTs.

SE-IP65CVR-G Hinged Transparent Cover
Watertight cover, tamper resistant, IP65 protection.

Littelfuse reserves the right to make product changes, without notice. Material in this document is as accurate as known at the time of publication. Visit Littelfuse.com for the most up-to-date information.

© 2021 Littelfuse, Inc

Features & Benefits

FEATURES	IEEE #	BENEFITS
Continuous NGR monitoring	3	Detects resistor failure within seconds, reduces transient-overvoltage risk, removes risk of ground-fault-detection failure
Shorted NGR detection	3	Detects a ground fault on the neutral that could bypass the resistor, ensures fault current is not higher than expected
Ground-fault detection	50G/N, 51G/N, 59N	Main or backup protection to detect a ground fault anywhere on the monitored system
Adjustable pickup (2-100%)		Select greatest sensitivity without false operation, adjustable in 1% increments (MEM setting)
Adjustable time delay (0.1-10 s)		Adjustable trip delay allows quick protection and system coordination
Universal CT compatibility		Allows the use of a CT that gives required ground-fault settings
Programmable output contacts		Two programmable Form C and One programmable Form A (Ground Fault, Resistor Fault, Unit Health)
Selectable contact operating mode		Selectable fail-safe or non-fail-safe operating modes allows connection to shunt or undervoltage breaker coil or alarm circuit (K1, K2, and K3 output contacts)
Analog output (4-20 mA)		Connect an optional PGA-0520 meter or control system
Pulsing output (SE-330 only)		Control the operation of a pulsing ground-fault-location circuit
Trip records		On-board 100-event (with date and time) recorder helps with system diagnostics
Harmonic filtering (DFT)		Eliminate false trips due to harmonic noise from ASDs
Local communications		Mini USB port to view measured values, configure settings, and check event records
Data logging		On-board microSD card (included) can be used for long-term data logging
Network communications		Remotely view measured values and event records, reset trips, and cause a remote trip Available Protocol Options: **IEC 61850** - with dual RJ45, SC Fiber and RJ45, or Dual SC Fiber Interface **Modbus TCP and Ethernet/IP** - with dual RJ45, SC Fiber and RJ45, or Dual SC Fiber Interface **DeviceNet** - with CAN interface
Software		PC-interface software (SE-MON330) is available at Littelfuse.com/RelaySoftware
Selectable reset mode		Selectable latching or auto-reset operation
Unit-healthy output		Verifies SE-330 is operating correctly, available as Form A or Form B output contact
Conformal coating		Internal circuits are conformally coated to protect against corrosion and moisture

Typical Values

SYSTEM VOLTAGE (VOLTS)	NEUTRAL-GROUNDING RESISTOR		SENSING RESISTOR		GROUND-FAULT PICKUP LEVEL (AMPERES)	V_N PICKUP LEVEL (VOLTS)
	CURRENT (AMPERES)	RESISTANCE (OHMS)	MODEL	RESISTANCE (SWITCH S5 SETTING)		
480	5	55	ER-600VC	20 kΩ	2.5	170
600	5	69	ER-600VC	20 kΩ	2.5	200
2,400	5	277	ER-5KV	20 kΩ	2.5	800
4,160	5	480	ER-5KV	20 kΩ	3	1,700
7,200	10	416	ER-15KV	100 kΩ	2	170 x 5 = 850
14,400	15	554	ER-15KV	100 kΩ	3	340 x 5 = 1,700

DISCLAIMER: The above table is for illustrative purposes only. Actual values may differ based on a variety of individual system considerations, such as capacitive charging current and coordination study results.

Wiring Diagram

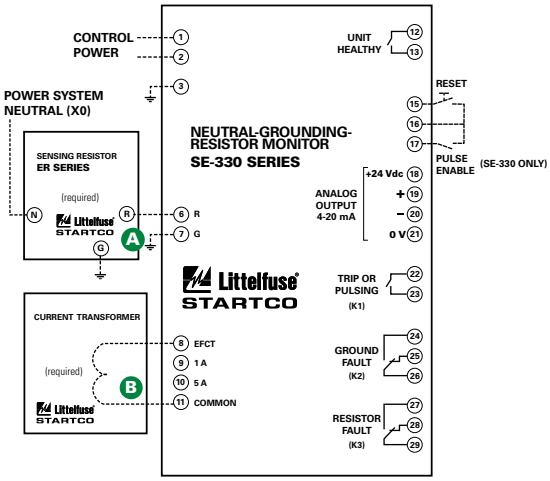

NOTE (1) - The Profibus option has been discontinued. Please see the SE-330 PCN document.

Specifications

IEEE Device Numbers	Ground Fault (50G/N, 51G/N, 59N), Checking Relay (3), Lockout Relay (86)
Input Voltage	See ordering information
Dimensions	**H** 213 mm (8.4"); **W** 98 mm (3.9"); **D** 132 mm (5.2")
GF Trip-Level Settings	2-100% of CT-Primary Rating in 1% increments
GF Trip-Time Settings	0.1-10 s
Vn Trip-Level Settings	20-2,000 Vac (≤5 kV systems) 100-10,000 Vac (>5 kV systems)
Contact Operating Mode	Selectable fail-safe or non-fail-safe (K1)
Harmonic Filtering	Standard feature
Reset Button	Standard feature
Output Contacts	Two Form A and two Form C
Pulsing Circuit	1.0-3.0 s in 0.2 s increments (SE-330 only)
Approvals	CSA certified, UL Listed (E340889), CE (European Union), RCM (Australian)
Communications	Mini USB (standard); DeviceNet (optional), IEC 61850 (optional), Modbus TCP and EtherNet/IP (optional)
Analog Output	4-20 mA, self or loop powered
Conformally Coated	Standard feature
Warranty	5 years
Mounting	Panel and Surface

© 2021 Littelfuse, Inc

SB6000 SERIES

Industrial SHOCK BLOCK® LITTELFUSE® Products

Enclosed Model* Open-Chassis Model*

Patented Operator Interface

Simplified Circuit Diagram

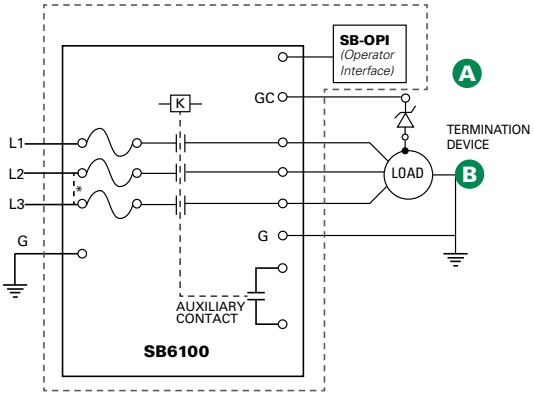

ENCLOSED SB6100 MODELS

Ordering Information

ORDERING NUMBER	VOLTAGE (V)	TRIP LEVEL (MA)	UL CATEGORY/CLASS
SB6100-00x-0	208	20 (Fixed)	UL 943C Class C special-purpose GFCI
SB6100-10x-0	240		
SB6100-20x-0	480		
SB6100-30x-0	600		UL 943C Class D special-purpose GFCI
SB6100-01x-0	208	6, 10–100 in increments of 10	UL 943/UL 1053 Equipment ground-fault protective device (EGFPD)
SB6100-11x-0	240		
SB6100-21x-0	480		
SB6100-31x-0	600		
SB6100-02x-0	208	6 (Fixed)	UL 943 Class A GFCI

Note: x=0 for open-chassis models and 1 for enclosed models

Description

Special-Purpose Ground-Fault Circuit Interrupter (GFCI), Class C and Class D

Industrial Shock Block (ISB) is a personnel protection device designed to meet the requirements for special-purpose GFCIs defined by UL 943C. This standard outlines GFCI classes specifically designed for use in industrial facilities. Class C GFCIs are intended to be used on three-phase systems where the line-to-line voltage is 480 V or less with a trip level of 20 mA, while Class D GFCIs are intended to be used on 600 V systems. The Industrial Shock Block includes an automatic self-test feature and is compliant to the UL 1998 Software in Programmable Components standard.

Ground-Fault Circuit Interrupter (GFCI), Class A

The Shock Block is available as a Class A GFCI, allowing commercial kitchens and commercial establishments with wet areas to meet NEC 210.8(B) for their 3-phase loads up to 100 A.

Equipment Ground-Fault Protective Device (EGFPD)

Industrial Shock Block is also available with adjustable protection settings as an EGFPD. The EGFPD models can be set to trip at 6 mA or from 10-100 mA in increments of 10 mA. This offers more flexibility since GFCI devices are not allowed to have an adjustable trip level.

Rating and Models

Industrial Shock Block (GFCI & EGFPD) is available for three-phase voltages from 208 to 600 V with a maximum full load current of 100 A, and a built-in overcurrent protection supplied by Littelfuse Class T fuses. The load must be 3-phase, however, cannot have a neutral. The power system can either be solidly-grounded or high-resistance grounded.

Two options for enclosures are available: UL-recognized open-chassis models are available for installation in existing electrical enclosures and UL-listed enclosed models include a NEMA-4X enclosure for stand-alone installations.

Ground Wire (Load-Ground) Monitor

The Industrial Shock Block also monitors the ground wire (load-ground) connection between the Industrial Shock Block and load. This is a required feature for Class C and D GFCI devices and and is recommended for Class A and EGFPD devices devices. If the connection is broken, the Industrial Shock Block will trip and provide an alarm by changing the state of the alarm contacts. This monitoring circuit includes an extra wire (pilot wire) between the Industrial Shock Block and load (since the monitoring current is low, only a small wire is required). At the load, the pilot wire is connected to a termination device. The other end of the termination device is connected to the load ground (typically the enclosure).

Features & Benefits

FEATURES	BENEFITS
UL 943 inverse time trip curve	Detects and interrupts to protect people and reduce the probability of nuisance tripping
Minimum trip time < 20 msec	Reduces the risk of ventricular fibrillation for leakage current of 250 mA and above
Fixed 6 mA (UL 943) or 20 mA (UL 943C) trip level	Personnel protection for industrial and commercial systems on loads up to 100 A
Selectable trip levels (EGFPD)	Provides extra safety when a customer is able to operate with a setting below 20 mA (GFCI) and the settings above 20 mA can reduce nuisance tripping on systems with high leakage current
UL 943C ground monitor/ interrupt	Protects from shock by tripping if continuity of ground wire between Industrial Shock Block and load is broken
Undervoltage, brownout, chatter detection	Ensures proper operation and prolongs the internal contactor lifetime
3 x Class T, 600 V incoming fuses	The fuses provide overcurrent protection for a 100 A circuit and a higher short-circuit current rating (SCCR) of 50 kA
Conformal coating	Internal circuits are conformally coated to protect against corrosion and moisture, yet still repairable
Operator interface	Shows unit status, alarm types, percentage of leakage current, and allows for Test and Reset capabilities
Auxiliary contact	Provides a normally-open contact for remote indication
Automatic self-test	All units include an automatic self-test feature include an automatic self-test feature
Motor starter	Allows the user to start and stop the motor from the interface

© 2021 Littelfuse, Inc

Accessories

A **Operator Interface (AC6000-OPI-00)**

B **1N5339B - Termination Device**
Axial-lead ground-check termination, included with SB6000 series

SE-TA6 - Termination Assembly
Optional termination assembly with terminals and mounting holes

SE-TA6-SM Stud-Mount Termination Assembly
Optional ground-check termination for submersible pumps

AC6000-CART-00 Two-wheeled Cart
Optional for mounting ISB to allow for moving the unit while power is off

AC6000-MNT-00 Mounting Frame
Optional for mounting ISB to a cart or other surface. Included with the AC6000-CART-00.

Ordering Information - Accessories

ACCESSORIES	REQUIREMENT	PAGE*
AC6000-OPI-00	Included	N/A
1N5339B	Included	120
SE-TA6	Optional	120
SE-TA6-SM	Optional	120
SE-TA6ASF-WL	Optional	120
AC6000-CART-00	Optional	N/A
AC6000-MNT-00	Optional	N/A

** Page in Protection Relay & Controls Catalog*

Connection Diagram

The SB6100 is installed in-line between incoming power or existing overcurrent protection device and the load.

The open-chassis SB6100 can be installed in electrical equipment and the enclosed version is typically wall-mounted.

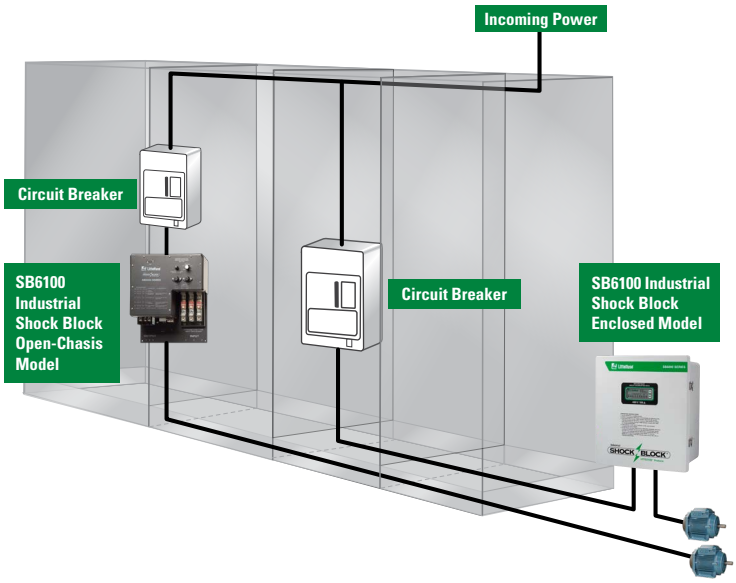

Specifications

Voltage Rating	See ordering information
Current Rating	100 A (continuous)
System Type	3-phase, 3-wire (no neutral), 60 Hz
Short-Circuit Current Rating	50,000 A
Trip Level Settings	Selectable (6, 10, 20, 30, 40, 50, 60, 70, 80, 90, 100 mA), fixed at 6 mA, or fixed at 20 mA
Trip Time Setting	Inverse time trip curve
Enclosure	NEMA 4X, Polyester, Lockable
Operating Temperature	–35 °C (–31 °F) to + 40 °C (104 °F), up to + 66 °C (151 °F) with derating
Wiring Requirements	2/0 AWG (maximum)
Approval	GFCI: UL Listed (enclosed models) and UL Recognized Component (open-chassis models) EGFPD: cULus Listed (enclosed models) and cURus Recognized Component (open-chassis models); UL1998 Compliant (revision 01 or higher); All models except SB6100-02x-0 CSA Certified
Dimensions	Enclosed: **H** 453.8 mm (17.9”); **W** 406.2 mm (16.0”); **D** 223.3 mm (8.8”) Open-chassis: **H** 455.0 mm (17.9”); **W** 340.7 mm (13.4”); **D** 174.9 mm (6.8”)
Warranty	1 year

© 2021 Littelfuse, Inc

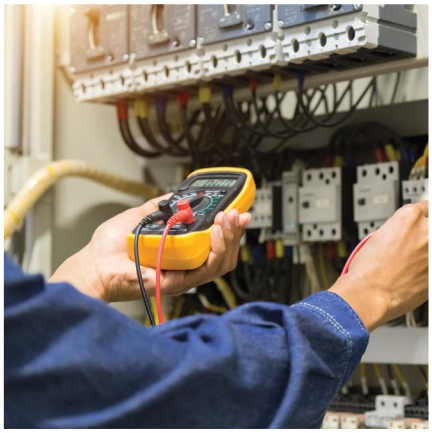

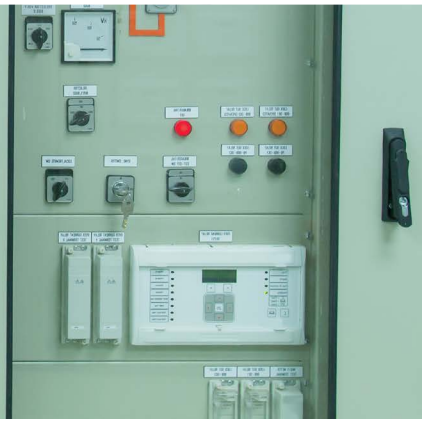

North America

Littelfuse World Headquarters
8755 West Higgins Road, Suite 500
Chicago, IL 60631, USA

Technical Support:
Tel: +1-800-832-3873
E-mail: relays@littelfuse.com

Littelfuse SymCom
1241 Concourse Drive
Rapid City, SD 57703, USA

Customer Service:
Tel: +1-800-227-0029
E-mail: PG_CSG@littelfuse.com

Littelfuse Startco
140 – 15 Innovation Boulevard
(The Galleria Building)
Saskatoon, SK S7N 2X8

Asia

Littelfuse
Unit 1604B Desay Building
Gaoxin Nanyi Ave.
Hi-Tech Industrial Park
Nashan District
Shenzen, 518057, China
+86 755 8207 0760

Europe

Littelfuse
Julius-Bamberger-Str. 8a
Bremen, D-28279, Germany
+49 421 82 87 3 147

Littelfuse products are certified to many standards around the world. To check certifications on specific components, please refer to the specific product datasheet on Littelfuse.com.

Specifications, descriptions and illustrative material in this literature are as accurate as known at the time of publication, but are subject to changes without notice.
Visit Littelfuse.com for the most up-to-date technical information.

Disclaimer Notice – Information furnished is believed to be accurate and reliable. However, users should independently evaluate the suitability of and test each product selected for their own applications. Littelfuse products are not designed for, and may not be used in, all applications. Read complete Disclaimer Notice at **www.littelfuse.com/product-disclaimer.**

© 2021 Littelfuse, Inc.

FORM PF832
Rev: 042121