MM	IN
2.79	.110
3.04	.120
4.82	.190
11.17	.440
12.70	.500
19.81	.780
23.87	.940
39.11	1.54
42.92	1.69
50.80	2.00
52.57	2.07

95521 CHART

APPLICABLE SAE STANDARD OR RECOMMENDED PRACTICE SAE J259

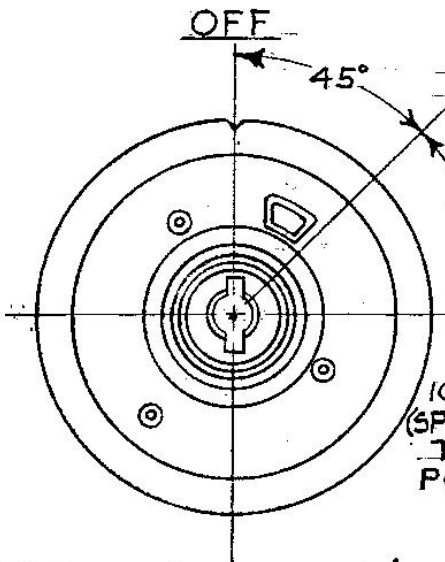

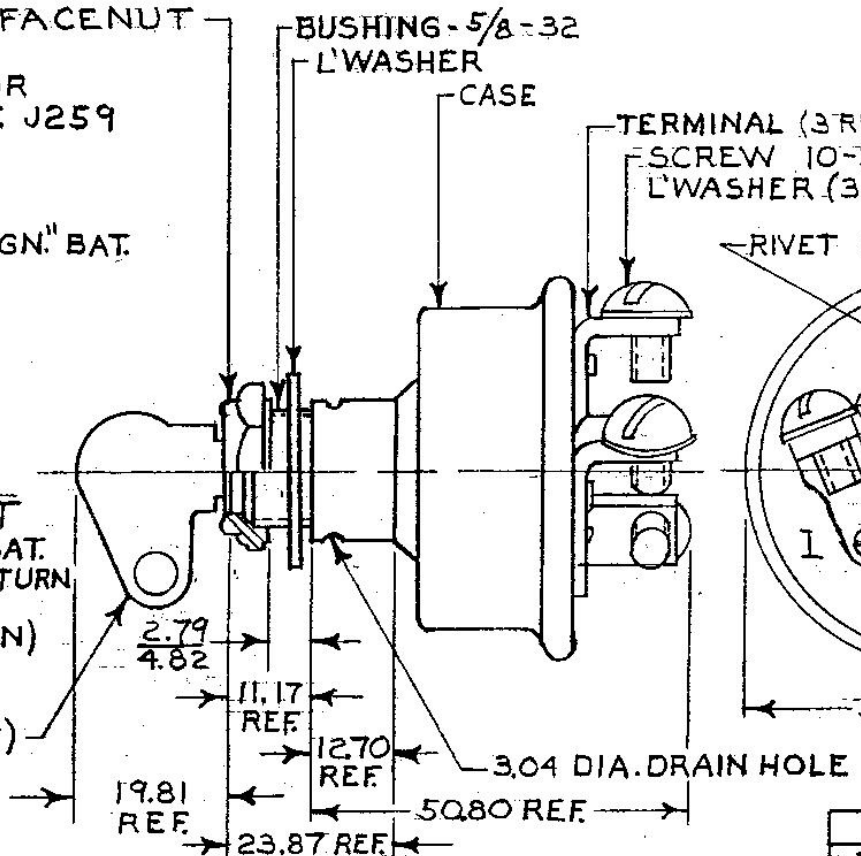

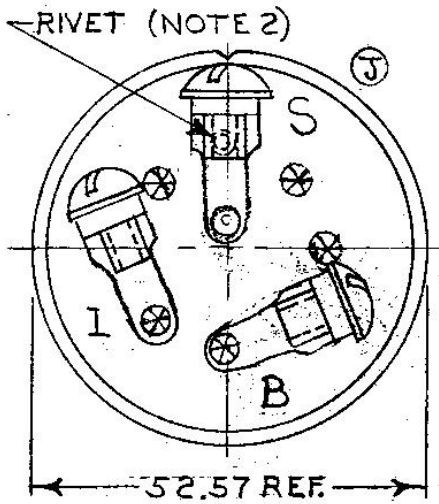

METRIC

"A" TYPE SWITCH SHOWN

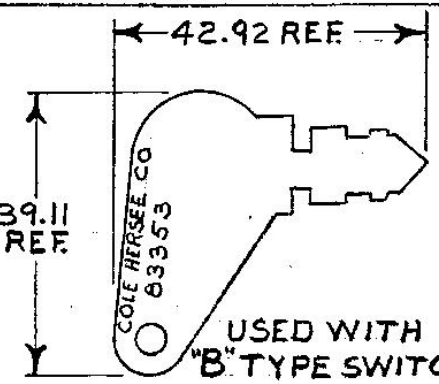

OPTIONAL KEY

NOTES:
1. KEY REMOVABLE IN "OFF" POSITION ONLY.
2. SILVER LAMINATED CONTACT SURFACES AT START POSITION.
3. "O" RING SEALED AT MTG. STEM.
4. DESIGNED FOR MAX. OF 70 AMP AT "START" CIRCUIT (MAY PERMIT ELIMINATION OF SOLENOID.
5. ALL STEEL PARTS PLATED.
6. RATING: 70 AMPS @ 12VDC (COMBINED LOAD).

LEGEND	
I	IGNITION
S	START
B	BATTERY

SWITCH NO.	KEY PART NO.
95521-B	83353 2 KEYS RINGED
95521-A	83357 2 KEYS RINGED
95521 BASIC	—

DO NOT SCALE

LET.	WAS	DATE	BY	LET	WAS	DATE	BY
				J	REVETS #02009	1/10/02	SR
				H	ECN 01041	1-17-91	[illegible]
				G	REDRAWN	9-6-84	VAK

MATERIAL	DRAWN	CHECKED	APPRV'D.	SCALE	DATE DRAWN
—	PH	T.N.		1:1	11-26-62
FINISH —	Cole Hersee Co. 20 OLD COLONY AVENUE, SOUTH BOSTON, MA. U.S.A. 02127				DATE BLUEPRINT
TOLERANCES DECIMAL ± METRIC ±	SWITCH, IGN. & ST., 3 POS.				95521

CH-188(4-78)

Confidential Property of Cole Hersee